富士電機

Innovating Energy Technology

FUJI Power Semiconductors

IGBT/SiC Devices Selection Guide

Small PIM PAGE 8

PIM PAGE 9

6-Pack PAGE 11

Standard 2-Pack PAGE 13

Standard 1-Pack/ Chopper PAGE 15

High Power Module PAGE 17

PrimePACK™ PAGE 18

T/I-type NPC 3-level PAGE 19

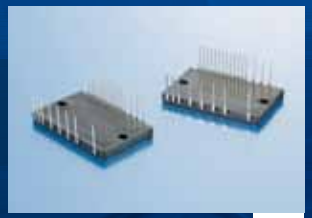

Small IPM PAGE 20

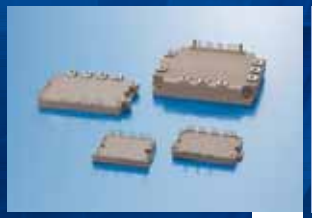

IPM PAGE 20

Hybrid SiC Module PAGE 23

Discrete IGBT PAGE 24

Rectifier Diode / SiC-SBD PAGE 25

Note: PrimePACK™ is registered trademark of Infineon Technologies AG, Germany.

25A2-J-0005

IGBTモジュール　Xシリーズの特長

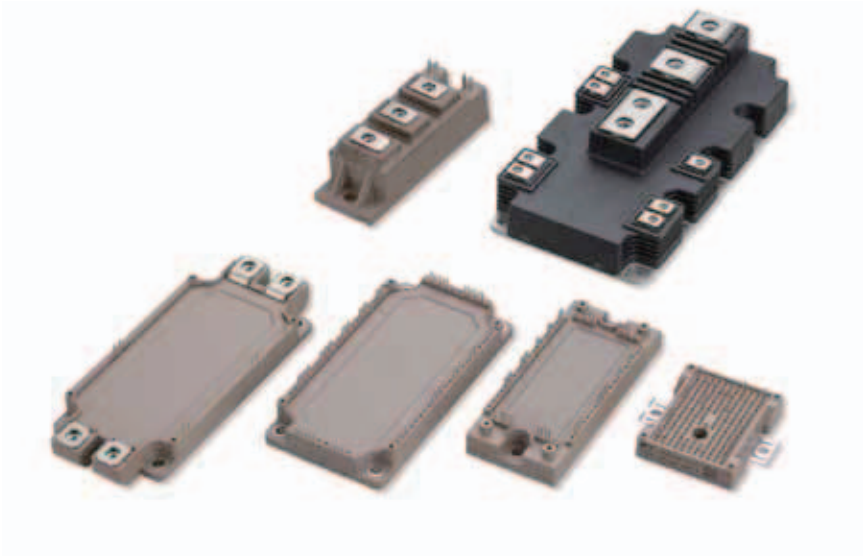

1. 低損失

本モジュールを構成する IGBT 素子およびダイオード素子の厚みを薄くし微細化することで、素子構造を最適化。これにより、従来製品（当社第 6 世代 V シリーズ）に比べてインバータ動作時の電力損失を低減。

インバータロスを 10%、チップ温度を 11℃低減
（第 6 世代 V シリーズ EP3 パッケージ 75A, f_c=8kHz 比較）

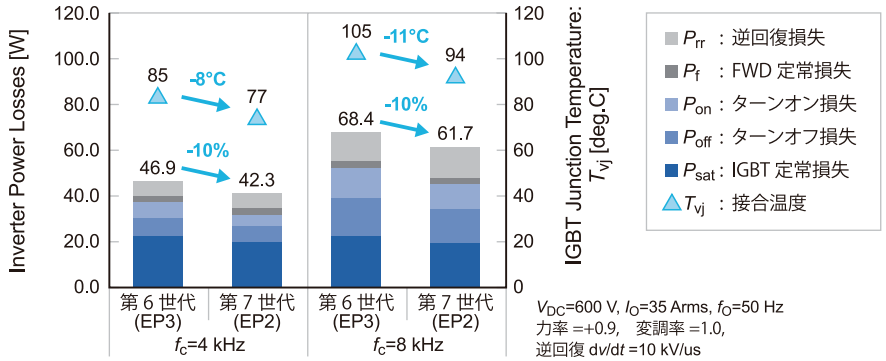

2. 小型化

新たに開発した絶縁基板を適用し、モジュールの放熱性を向上。
電力損失低減と併せて発熱を抑制することで、従来製品に比べて約 36% の小型化を達成。

適用例）

36% 小型化

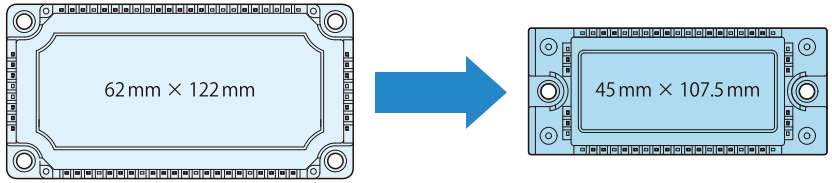

EP3 75A（第 6 世代 V シリーズ）　　EP2 75A（第 7 世代 X シリーズ）

3. 高温動作

高信頼性・高耐熱パッケージおよびチップの最適化により 175℃連続動作を実現。

- 従来製品より更に 35% の出力アップも可能
- ΔT_{vj} パワーサイクル耐量向上（従来比2 倍）

$T_{vj(op)}$=175℃化による更なる出力アップ

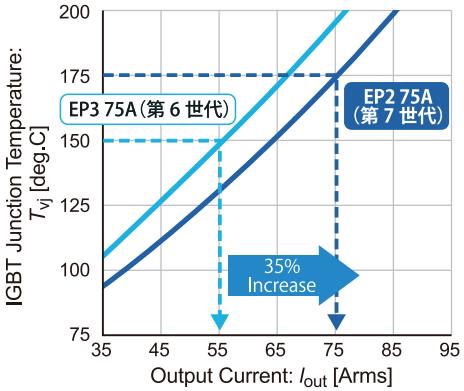

Number of IGBT Switches	Products Category	Page	Internal Configuration: IGBT Module: Standard Module	Power Integrated Module	Intelligent Power Module	Discrete IGBT	Rectifier Diode	Discrete SiC-SBD	Max V_{CE} (V_{RRM}): 600V	650V	1200V	1700V	3300V	Rated Current: ≤50A	>50A ≤150A	>150A ≤300A	>300A ≤600A	>600A ≤1200A	>1200A
7	Small-PIM	8		✓					✓	✓	✓			✓					
	PIM EconoPIM™	9		✓					✓	✓	✓			✓	✓				
		10							✓	✓	✓			✓	✓				
6	6-Pack EconoPACK™	11	✓						✓		✓	✓		✓	✓	✓			
		12									✓	✓				✓	✓		
2	Standard 2-Pack	13	✓						✓	✓	✓	✓			✓	✓	✓		
		14									✓	✓				✓	✓	✓	
1	Standard 1-Pack	15	✓								✓	✓					✓	✓	
	Chopper	15	✓						✓		✓			✓	✓	✓			
1,2	High Speed Module	16	✓								✓				✓	✓	✓		
	High Power Module	17	✓								✓	✓	✓				✓	✓	✓
	PrimePACK™	18	✓								✓	✓					✓	✓	✓
4,12	T/I-type NPC 3-level	19	Reverse-Blocking IGBTs are integrated.						✓		✓	✓		✓	✓	✓	✓	✓	
6,7	IPM	20							✓		✓			✓	✓				
		21			✓				✓		✓			✓	✓	✓	✓		
		22							✓		✓			✓	✓	✓	✓		
2,6,7	Hybrid SiC Module	23	✓	✓					✓		✓	✓		✓	✓	✓	✓	✓	
1	Discrete IGBT	24				✓			✓	✓	✓			✓	✓				
–	Rectifier Diode	25					✓		✓	✓	✓			✓	✓				
–	SiC-SBD	25						✓		✓	✓			✓					

Note: PrimePACK™ is registered trademark of Infineon Technologies AG, Germany.
EconoPIM™ is registered trademark of Infineon Technologies AG, Germany. EconoPACK™ is registered trademark of Infineon Technologies AG, Germany.

IGBT Module Production Number

6 MB I 300 X □···□ - 120 - 50

- 50: Suffix 50 to 99 indicates RoHS compliance
- 120: Max V_{CE} : 060 = 600V, 065 = 650V, 120 = 1200V, 170 = 1700V, 330 = 3300V
- □···□: Package Type
- X: IGBT Device Technology : X Series(7th Generation) / V Series(6th Generation) / U Series(5th Generation)
- 300: Rated current I_C [A]
- I: Internal Configuration : I = Standard Module, R = Power Integrated Module, P = Intelligent Power Module
- MB: IGBT Module type: MB = Si-IGBT+ Si-Diode, MS = Si-IGBT+ SiC-SBD
- 6: Number of IGBT switches

Rectifier Diode Production Number

F DR W 50 C 65 L

- L: Series: L = Ultra Fast Recovery, J = Soft/Fast Recovery
- 65: Max V_{RRM} : 60 = 600V, 65 = 650V, 120 = 1200V
- C: Cofiguration : C = Dual (Cathode common), S or T = Single
- 50: Rated Current I_O [A]
- W: Package Type : P = TO-220, W = TO-247-P2
- DR: Device Code : DR = FWD
- F: Company Code : Fuji

Discrete IGBT Production Number

F G W 50 N 65 W D

- D: Diode Type: C or E = With Diode(Full rated), D = With Diode, Blank = Without Diode
- W: Series: W = High Speed W series, H = High Speed V series, V = V Series, RB = RB series
- 65: Max V_{CE} : 60 = 600V, 65 = 650V, 120 = 1200V
- N: Polarity: N = N-ch
- 50: Rated Current I_C [A]
- W: Package Type : W = TO-247-P2, Z = TO-247-4-P2
- G: Device Code : G = IGBT
- F: Company Code : Fuji

SiC Schottky-Barrier Diode Production Number

F DC P 10 S 65

- 65: Max V_{RRM} : 65 = 650V, 120 = 1200V
- S: Cofiguration : C = Dual (Cathode common), S or T = Single
- 10: Rated Current I_O [A]
- P: Package Type : A = TO-220F, C = T-Pack(s), P = TO-220, W = TO-247-P2
- DC: Device Code : DC = SiC-SBD
- F: Company Code : Fuji

PIM (Power Integrated Modules) Products Map

7MBR	Ic	IGBT series & Package type						
		V series		X series				
		Solder pins	Press fit pins	Solder pins	Press fit pins	Size	Page	
		VKC	VKA	XKC	XKA	33.8×62.8mm	8	
		VKD	VKB	XKD	XKB	56.7×62.8mm	8	
		VA, VM, VP	VW, VY	XM□, XP□	XW□, XY□	45×107.5mm	9,10	EconoPIM™
		VB, VN, VR	VX, VZ	XN□, XR□	XX□, XZ□	62×122mm	9,10	

Note:
EconoPIM™ is registered trademark of Infineon Technologies AG, Germany.

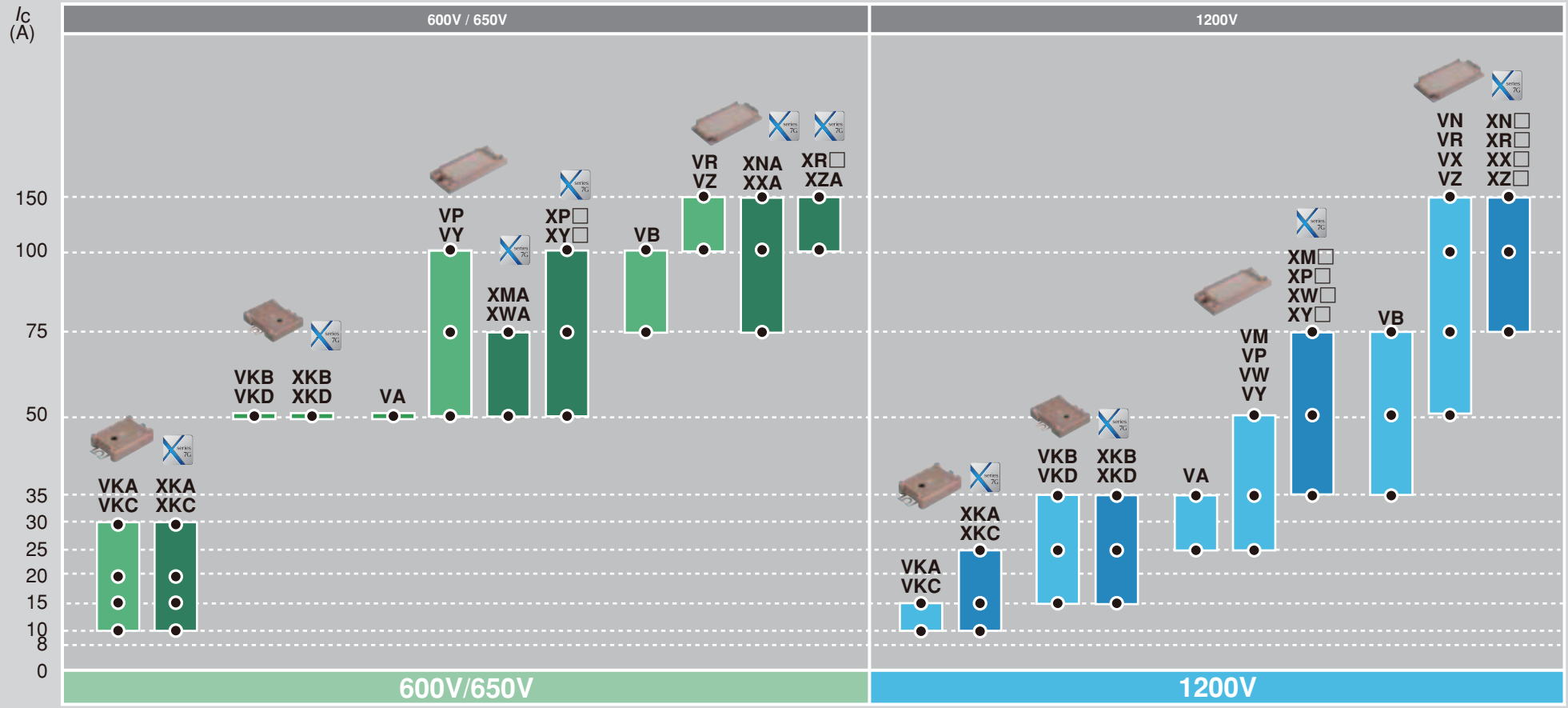

6-Pack Products Map

6MBI	Ic	IGBT series & Package type				Size	Page	
		V/U series		X series				
		Solder pins	Press fit pins	Solder pins	Press fit pins			
		VA,	VW	XAE*		45×107.5mm	11	EconoPACK™
		VB, U4B	VX	XB□	XB□, XX□	62×122mm	11	
		V				150×162mm	12	EconoPACK™+

*Under development

Note:
EconoPACK™ and EconoPACK™+ are registered trademark of Infineon Technologies AG, Germany.

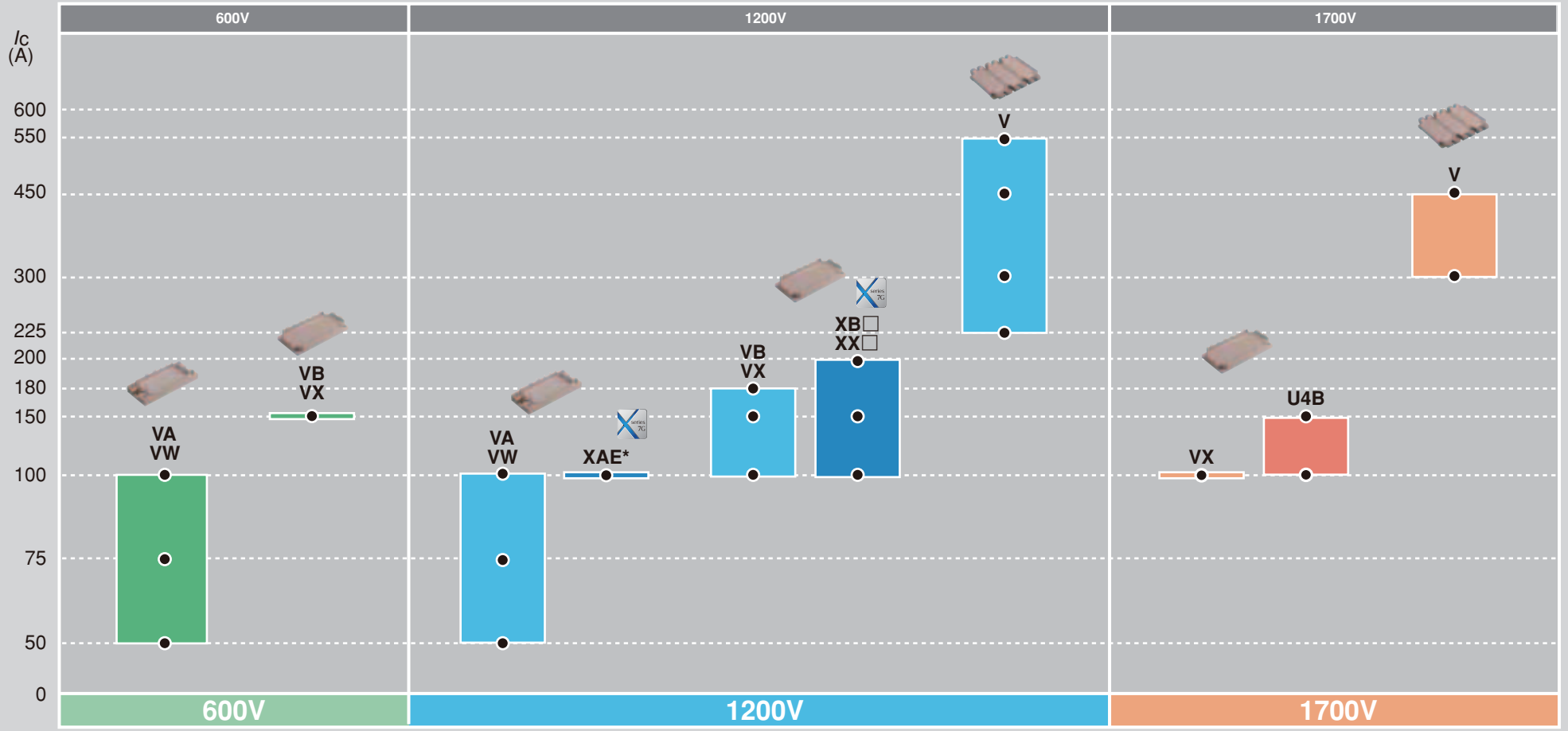

6-Pack (V series)

6-Pack (V series)
6-Pack (X series)

6-Pack (V series)
6-Pack (U series)

*Under development

2-Pack Products Map

2MBI	Ic	IGBT series & Package type				
		V series	X series	Size	Page	
		VA	XAA	34×94mm	13	Standard Pack
		VB	XBE	45×92mm	13	
		VD	XDE	62×108mm	13	
		VE	XEE	80×110mm	13	
		VH	XHA	62×108mm	13	
		VJ, VN, VX	XN□	62×150mm	14	
		VG, VT	-	140×130mm	17	High Power Module
		VXA	XXA*, XXE*	89×172mm	18	PrimePACK™
		VXB	XXB*, XXF*	89×250mm	18	

PrimePACK™ is registered trademark of Infineon Technologies AG, Germany *Under development

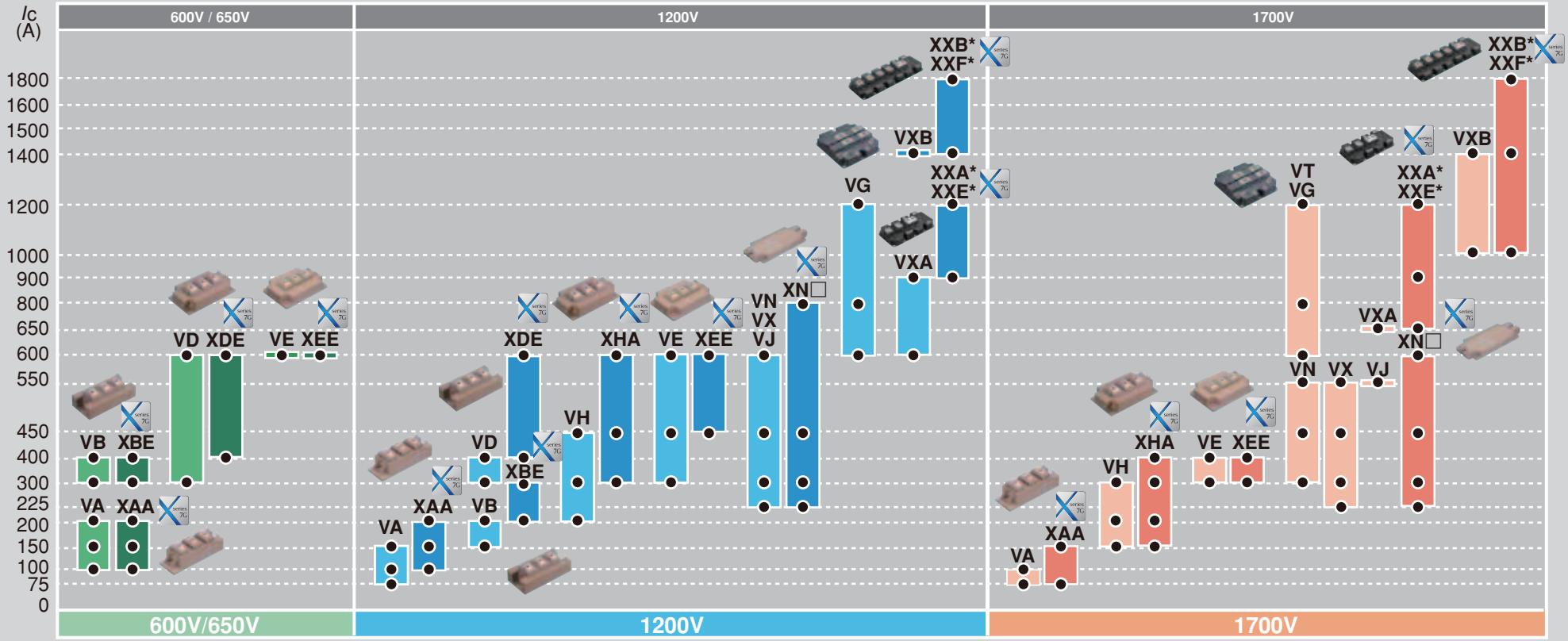

1-Pack Products Map

1MBI	Ic	IGBT series & Package type			
		V/U series	Size	Page	
		V	62×108mm	15	Standard Pack
		VC, VR, UG	140×130mm	17	High Powe Module
		VD, VS, UE	140×190mm	17	High Powe Module

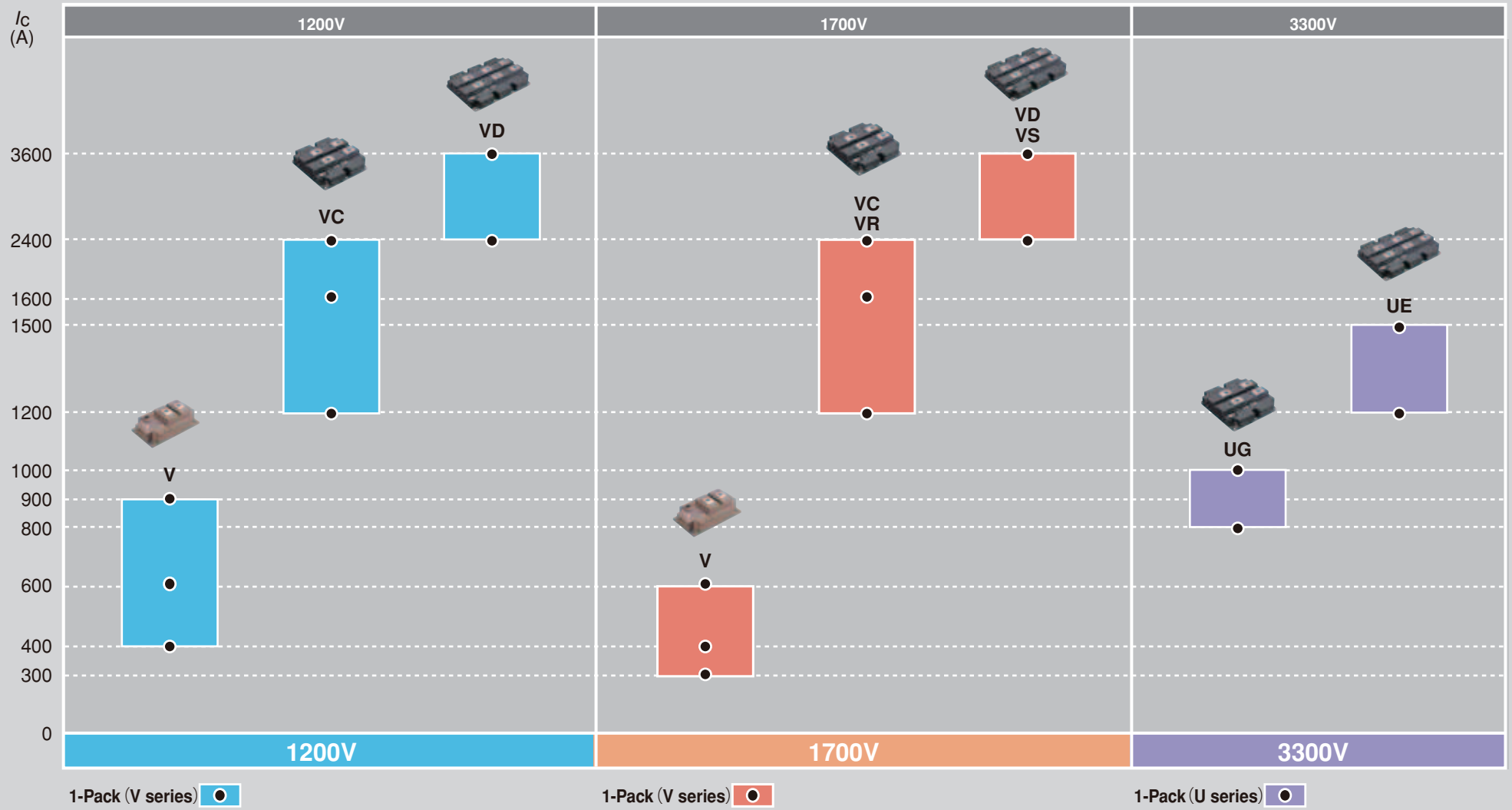

1-Pack (V series) ●　1-Pack (V series) ●　1-Pack (U series) ●

IPM (Intelligent Power Modules) Products Map

6/7MBP *Ic*

IGBT series & Package type	Size	V series		X series	Page
		7 in 1	6 in 1	6 in 1	
XSA, XSC	26×43mm	–	–	✓	20
VAA	49.5×70mm	–	✓	–	20
VBA	50.2×87mm	–	✓	–	20
VFN	55×90mm	✓	✓	–	20
VDA, VDN	84×128.5mm	✓	✓	–	21
VEA	110×142mm	✓	✓	–	22

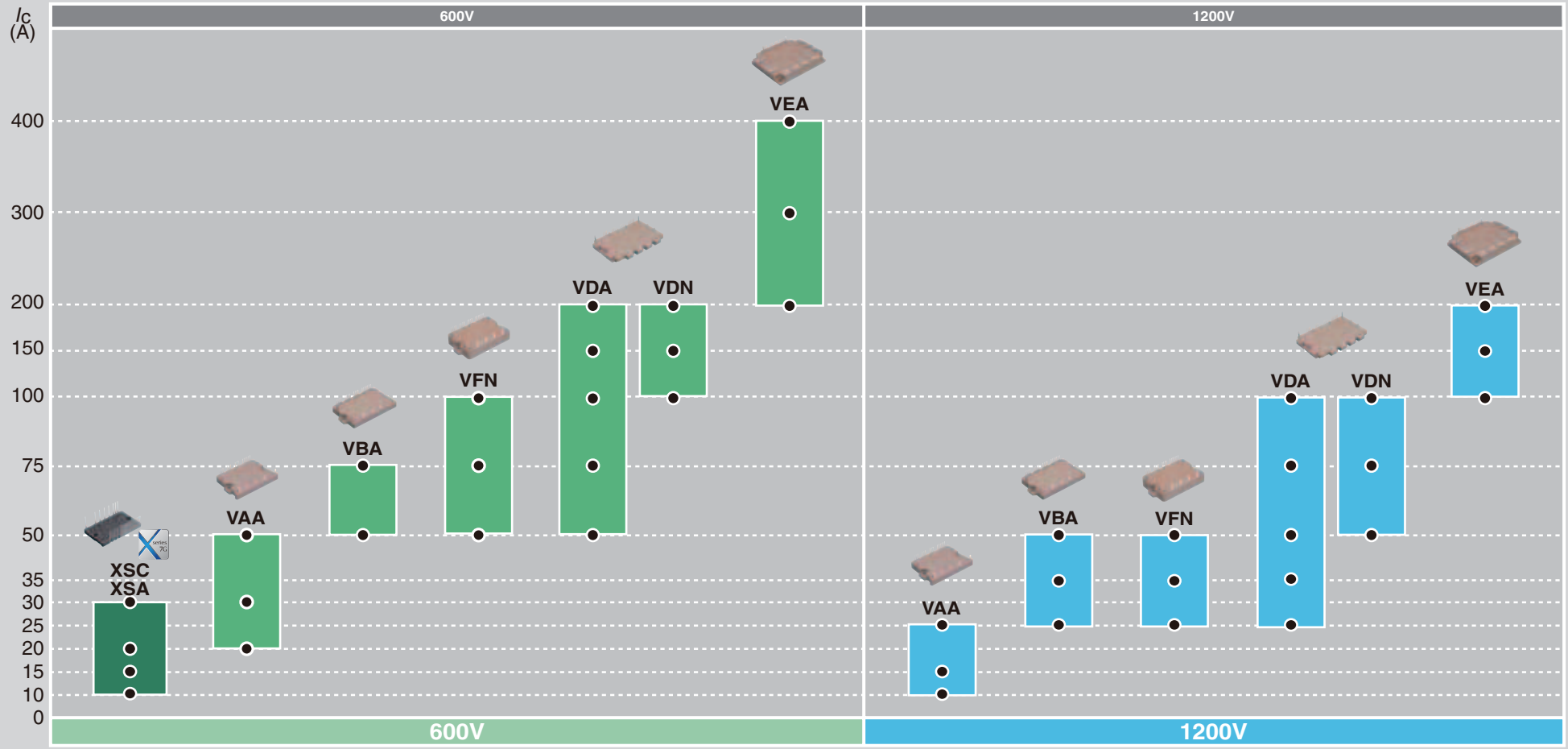

IPM (V series)
IPM (X series)

IPM (V series)

Small PIM (Power Integrated Modules)

mm

			600V	650V	1200V	
		Ic	V series	X series	V series	X series
With NTC, press fit pins	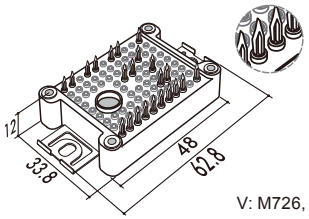 V: M726, X: M730 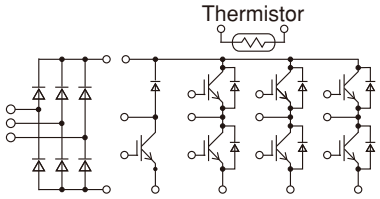	10A	7MBR10VKA060-50	7MBR10XKA065-50	7MBR10VKA120-50	7MBR10XKA120-50
		15A	7MBR15VKA060-50	7MBR15XKA065-50	7MBR15VKA120-50	7MBR15XKA120-50
		20A	7MBR20VKA060-50	7MBR20XKA065-50		
		25A				7MBR25XKA120-50
		30A	7MBR30VKA060-50	7MBR30XKA065-50		
	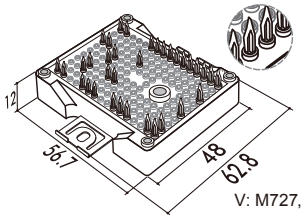 V: M727, X: M731 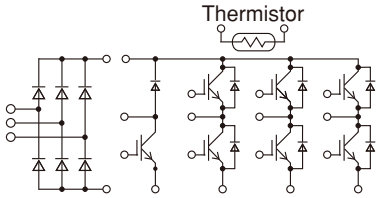	15A			7MBR15VKB120-50	7MBR15XKB120-50
		25A			7MBR25VKB120-50	7MBR25XKB120-50
		35A			7MBR35VKB120-50	7MBR35XKB120-50
		50A	7MBR50VKB060-50	7MBR50XKB065-50		
With NTC, solder pins	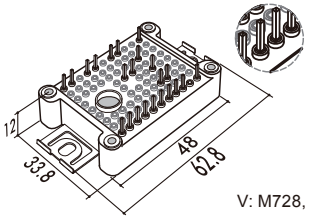 V: M728, X: M732 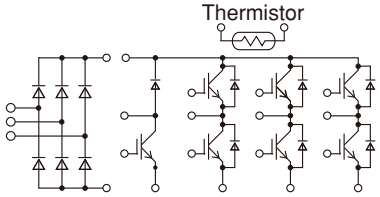	10A	7MBR10VKC060-50	7MBR10XKC065-50	7MBR10VKC120-50	7MBR10XKC120-50
		15A	7MBR15VKC060-50	7MBR15XKC065-50	7MBR15VKC120-50	7MBR15XKC120-50
		20A	7MBR20VKC060-50	7MBR20XKC065-50		
		25A				7MBR25XKC120-50
		30A	7MBR30VKC060-50	7MBR30XKC065-50		
	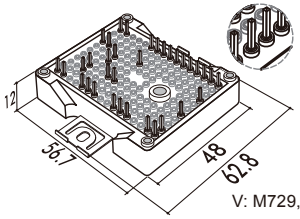 V: M729, X: M733 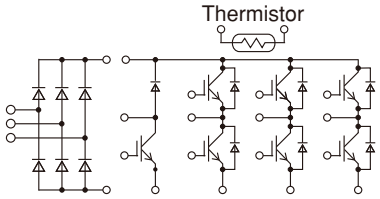	15A			7MBR15VKD120-50	7MBR15XKD120-50
		25A			7MBR25VKD120-50	7MBR25XKD120-50
		35A			7MBR35VKD120-50	7MBR35XKD120-50
		50A	7MBR50VKD060-50	7MBR50XKD065-50		

PIM (Power Integrated Modules) EconoPIM™

mm

With NTC, solder pins, PIM

	Ic	600V V series	650V X series	1200V V series	1200V X series
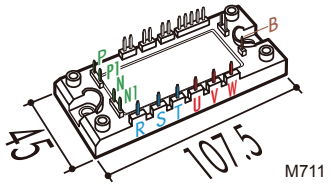 M711	25A			7MBR25VA120-50	
	35A			7MBR35VA120-50	
	50A	7MBR50VA060-50			
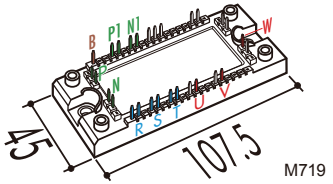 M719	25A			7MBR25VM120-50	
	35A			7MBR35VM120-50	7MBR35XMA120-50
	50A		7MBR50XMA065-50	7MBR50VM120-50	7MBR50XMA120-50
	75A		7MBR75XMA065-50		7MBR75XME120-50
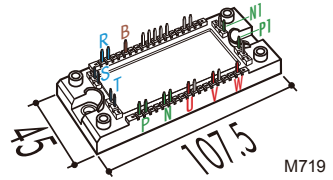 M719	25A			7MBR25VP120-50	
	35A			7MBR35VP120-50	7MBR35XPA120-50
	50A	7MBR50VP060-50	7MBR50XPA065-50	7MBR50VP120-50	7MBR50XPA120-50
	75A	7MBR75VP060-50	7MBR75XPA065-50		7MBR75XPE120-50
	100A	7MBR100VP060-50	7MBR100XPE065-50		
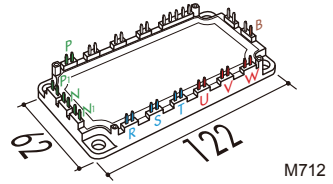 M712	35A			7MBR35VB120-50	
	50A			7MBR50VB120-50	
	75A	7MBR75VB060-50		7MBR75VB120-50	
	100A	7MBR100VB060-50			
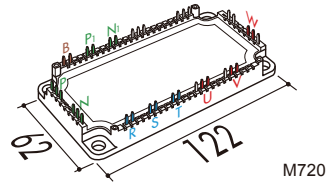 M720	50A			7MBR50VN120-50	
	75A		7MBR75XNA065-50	7MBR75VN120-50	7MBR75XNA120-50
	100A		7MBR100XNA065-50	7MBR100VN120-50	7MBR100XNA120-50
	150A		7MBR150XNA065-50	7MBR150VN120-50	7MBR150XNE120-50
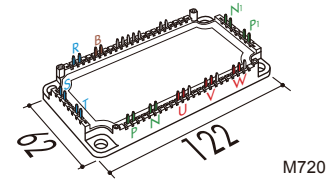 M720	50A			7MBR50VR120-50	
	75A			7MBR75VR120-50	7MBR75XRA120-50
	100A	7MBR100VR060-50	7MBR100XRA065-50	7MBR100VR120-50	7MBR100XRA120-50
	150A	7MBR150VR060-50	7MBR150XRA065-50	7MBR150VR120-50	7MBR150XRE120-50
			7MBR150XRE065-50		

Note1: Pin assignment of output terminals changes within the range of colored position depending on output current.
Note2: EconoPIM™ is registered trademark of Infineon Technologies AG, Germany.

PIM (Power Integrated Modules) EconoPIM™

mm

With NTC, press fit pins. PIM

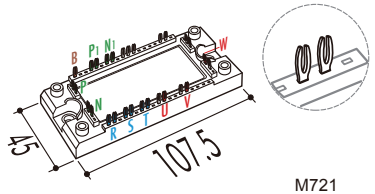

M721

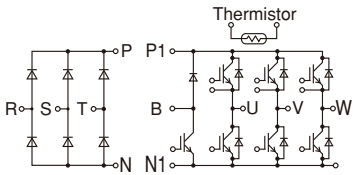

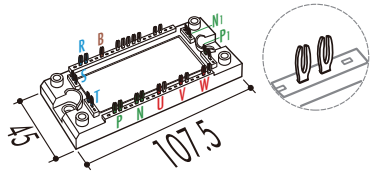

M721

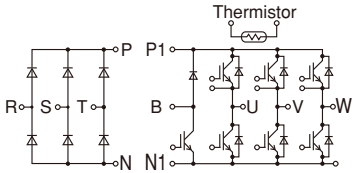

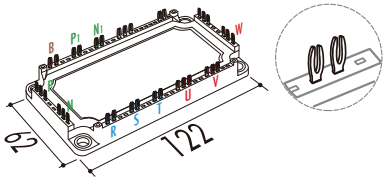

M722

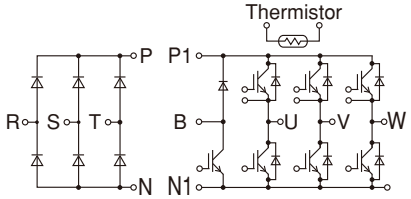

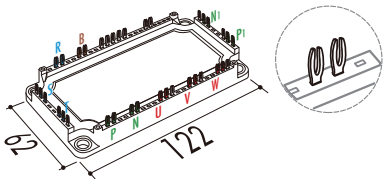

M722

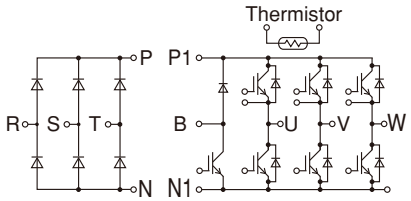

	600V	650V	1200V	
Ic	V series	X series	V series	X series
25A			7MBR25VW120-50	
			7MBR25VW120-80	
35A			7MBR35VW120-50	7MBR35XWA120-50
			7MBR35VW120-80	
50A		7MBR50XWA065-50	7MBR50VW120-50	7MBR50XWA120-50
			7MBR50VW120-80	
75A		7MBR75XWA065-50		7MBR75XWE120-50
25A			7MBR25VY120-50	
			7MBR25VY120-80	
35A			7MBR35VY120-50	7MBR35XYA120-50
			7MBR35VY120-80	
50A	7MBR50VY060-50	7MBR50XYA065-50	7MBR50VY120-50	7MBR50XYA120-50
	7MBR50VY060-80		7MBR50VY120-80	
75A	7MBR75VY060-50	7MBR75XYA065-50		7MBR75XYE120-50
	7MBR75VY060-80			
100A	7MBR100VY060-50	7MBR100XYE065-50		
	7MBR100VY060-80			
50A			7MBR50VX120-50	
			7MBR50VX120-80	
75A		7MBR75XXA065-50	7MBR75VX120-50	7MBR75XXA120-50
			7MBR75VX120-80	
100A		7MBR100XXA065-50	7MBR100VX120-50	7MBR100XXA120-50
			7MBR100VX120-80	
150A		7MBR150XXA065-50	7MBR150VX120-50	7MBR150XXE120-50
			7MBR150VX120-80	
50A			7MBR50VZ120-50	
			7MBR50VZ120-80	
75A			7MBR75VZ120-50	7MBR75XZA120-50
			7MBR75VZ120-80	
100A	7MBR100VZ060-50	7MBR100XZA065-50	7MBR100VZ120-50	7MBR100XZA120-50
	7MBR100VZ060-80		7MBR100VZ120-80	
150A	7MBR150VZ060-50	7MBR150XZA065-50	7MBR150VZ120-50	7MBR150XZE120-50
	7MBR150VZ060-80		7MBR150VZ120-80	

Note1: Pin assignment of output terminals changes within the range of colored position depending on output current.
Note2: EconoPIM™ is registered trademark of Infineon Technologies AG, Germany.
Note3: “-80” : Pre-Applied Thermal-Interface-Material for “-50”

6-Pack EconoPACK™

mm

		Ic	600V	1200V		1700V
			V series	V series	X series	V / U Series
With NTC, solder pins	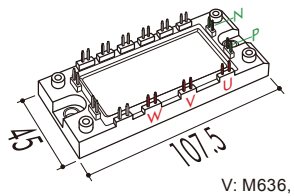 V: M636, X: M669 Solder pins 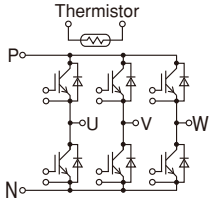	50A	6MBI50VA-060-50	6MBI50VA-120-50		
		75A	6MBI75VA-060-50	6MBI75VA-120-50		
		100A	6MBI100VA-060-50	6MBI100VA-120-50	6MBI100XAE120-50*	
With NTC, solder pins	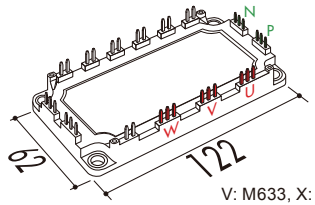 V: M633, X: M668 Solder pins 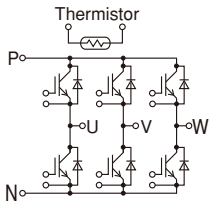	100A		6MBI100VB-120-50	6MBI100XBA120-50	6MBI100U4B-170-50
		150A	6MBI150VB-060-50	6MBI150VB-120-50	6MBI150XBA120-50	6MBI150U4B-170-50
		180A		6MBI180VB-120-50		
				6MBI180VB-120-55		
		200A			6MBI200XBA120-50	
					6MBI200XBE120-50	
With NTC, press fit pins	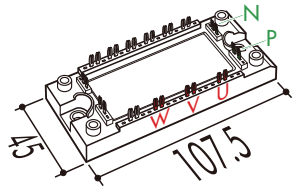 M647 Press fit pins 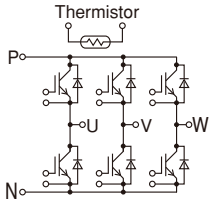	50A	6MBI50VW-060-50	6MBI50VW-120-50		
		75A	6MBI75VW-060-50	6MBI75VW-120-50		
		100A	6MBI100VW-060-50	6MBI100VW-120-50		
With NTC, press fit pins	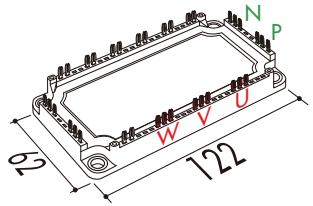 M648 Press fit pins 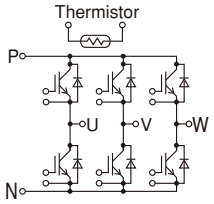	100A		6MBI100VX-120-50	6MBI100XXA120-50	6MBI100VX-170-50
				6MBI100VX-120-80		6MBI100VX-170-80
		150A	6MBI150VX-060-50	6MBI150VX-120-50	6MBI150XXA120-50	
			6MBI150VX-060-80	6MBI150VX-120-80		
		180A		6MBI180VX-120-50		
				6MBI180VX-120-80		
				6MBI180VX-120-55		
				6MBI180VX-120-85		
		200A			6MBI200XXA120-50	
					6MBI200XXE120-50	

Note1: 6MBI180VB-120-55, 6MBI180VX-120-55; Premium type (Low Thermal Impedance Version)
Note2: Pin assignment of output terminals changes within the range of colored position depending on output current.
"-80","-85" : Pre-Applied Thermal-Interface-Material for "-50","-55"
Note3: EconoPACK™ is registered trademark of Infineon Technologies AG, Germany.

*Under development

6-Pack EconoPACK™+

mm

With NTC, High power 6-Pack

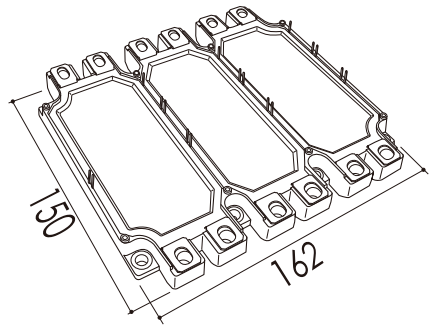

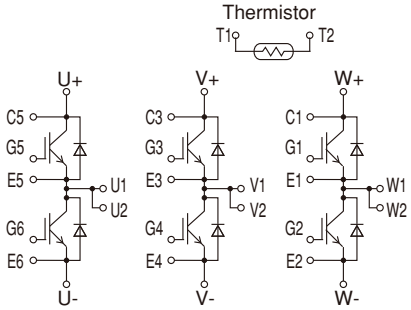

M629

	1200V	1700V
Ic	**V series**	**V series**
225A	6MBI225V-120-50	
300A	6MBI300V-120-50	6MBI300V-170-50
	6MBI300V-120-80	
450A	6MBI450V-120-50	6MBI450V-170-50
		6MBI450V-170-80
550A	6MBI550V-120-50	

Note1: EconoPACK™+ is registered trademark of Infineon Technologies AG, Germany.
Note2: “-80” : Pre-Applied Thermal-Interface-Material for “-50”

Standard 2-Pack

2-Pack

mm

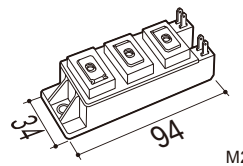

M263

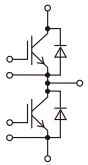

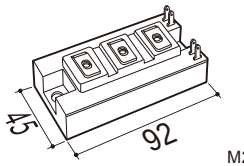

M274

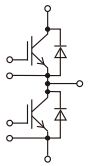

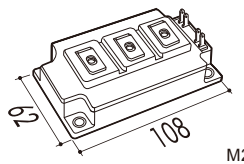

M275

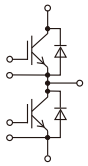

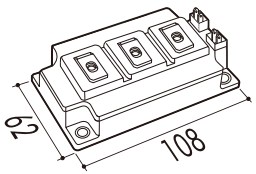

M276

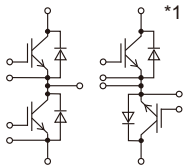

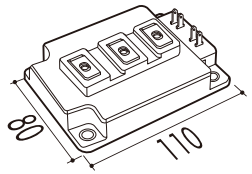

M277

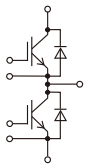

Ic	600V V series	650V X series	1200V V series	1200V X series	1700V V series	1700V X series
75A			2MBI75VA-120-50		2MBI75VA-170-50	2MBI75XAA170-50
100A	2MBI100VA-060-50		2MBI100VA-120-50	2MBI100XAA120-50	2MBI100VA-170-50	2MBI100XAA170-50
150A	2MBI150VA-060-50	2MBI150XAA065-50	2MBI150VA-120-50	2MBI150XAA120-50		2MBI150XAA170-50
200A	2MBI200VA-060-50	2MBI200XAA065-50		2MBI200XAA120-50		
150A			2MBI150VB-120-50			
200A			2MBI200VB-120-50	2MBI200XBE120-50		
300A	2MBI300VB-060-50	2MBI300XBE065-50		2MBI300XBE120-50		
400A	2MBI400VB-060-50	2MBI400XBE065-50				
300A			2MBI300VD-120-50			
400A	2MBI400VD-060-50	2MBI400XDE065-50	2MBI400VD-120-50	2MBI400XDE120-50		
600A	2MBI600VD-060-50	2MBI600XDE065-50		2MBI600XDE120-50		
150A					2MBI150VH-170-50	2MBI150XHA170-50
					2MBI150VH-170-80	
200A			2MBI200VH-120-50		2MBI200VH-170-50	2MBI200XHA170-50
			2MBI200VH-120-80		2MBI200VH-170-80	
300A			2MBI300VH-120-50	2MBI300XHA120-50	2MBI300VH-170-50	2MBI300XHA170-50
			2MBI300VH-120-80		2MBI300VH-170-80	
400A						2MBI400XHA170-50
450A			2MBI450VH-120-50	2MBI450XHA120-50		
			2MBI450VH-120-80			
			2MBI450VH-120F-50*1			
			2MBI450VH-120F-80			
600A				2MBI600XHA120-50		
300A			2MBI300VE-120-50		2MBI300VE-170-50	2MBI300XEE170-50
			2MBI300VE-120-80		2MBI300VE-170-80	
400A					2MBI400VE-170-50	2MBI400XEE170-50
					2MBI400VE-170-80	
450A			2MBI450VE-120-50	2MBI450XEE120-50		
			2MBI450VE-120-80			
600A	2MBI600VE-060-50	2MBI600XEE065-50	2MBI600VE-120-50	2MBI600XEE120-50		
	2MBI600VE-060-80		2MBI600VE-120-80			

Note: “-80” : Pre-Applied Thermal-Interface-Material for “-50”

Standard 2-Pack

mm

		Ic	1200V V series	1200V V series With SIN-substrate *1	1200V X series	1700V V series	1700V V series With SIN-substrate *1	1700V X series
With NTC, solder pins	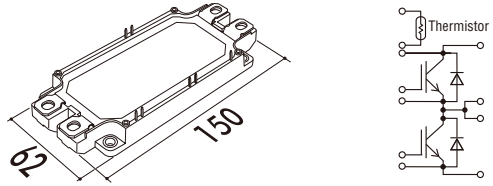 M254	225A	2MBI225VN-120-50	2MBI225VN-120S-50	2MBI225XNA120-50			2MBI225XNA170-50
			2MBI225VN-120-80					
		300A	2MBI300VN-120-50	2MBI300VN-120S-50	2MBI300XNA120-50	2MBI300VN-170-50		2MBI300XNA170-50
			2MBI300VN-120-80	2MBI300VN-120S-80		2MBI300VN-170-80		
		450A	2MBI450VN-120-50	2MBI450VN-120S-50	2MBI450XNA120-50	2MBI450VN-170-50		2MBI450XNA170-50
			2MBI450VN-120-80	2MBI450VN-120S-80		2MBI450VN-170-80		
		550A					2MBI550VN-170-50	
							2MBI550VN-170-80	
		600A		2MBI600VN-120-50	2MBI600XNG120-50			2MBI600XNG170-50
				2MBI600VN-120-80				
	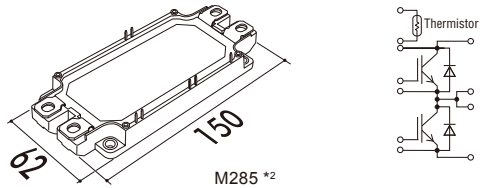 M285 *2	600A			2MBI600XNE120-50			2MBI600XNE170-50
		800A			2MBI800XNE120-50			
With NTC, press fit pins	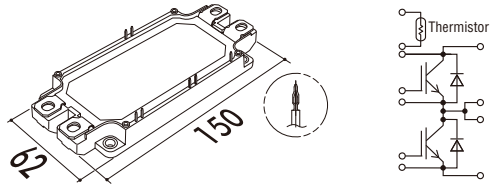 M282	225A	2MBI225VX-120-50		2MBI225XNB120-50	2MBI225VX-170-50		2MBI225XNB170-50
			2MBI225VX-120-80			2MBI225VX-170-80		
		300A	2MBI300VX-120-50		2MBI300XNB120-50	2MBI300VX-170-50		2MBI300XNB170-50
			2MBI300VX-120-80			2MBI300VX-170-80		
		450A	2MBI450VX-120-50		2MBI450XNB120-50	2MBI450VX-170-50		2MBI450XNB170-50
			2MBI450VX-120-80			2MBI450VX-170-80		
		550A					2MBI550VX-170-50	
							2MBI550VX-170-80	
		600A		2MBI600VX-120-50	2MBI600XNH120-50			2MBI600XNH170-50
				2MBI600VX-120-80				
	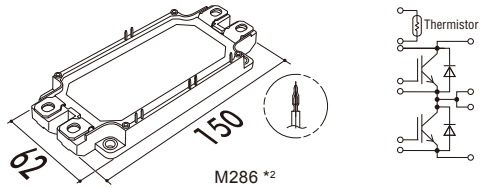 M286 *2	600A			2MBI600XNF120-50			2MBI600XNF170-50
		800A			2MBI800XNF120-50			
With NTC, spring contacts	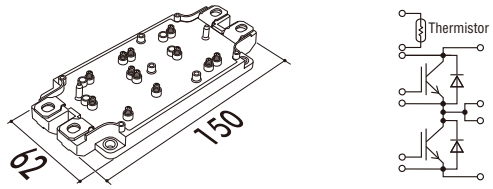 M260	225A	2MBI225VJ-120-50					
			2MBI225VJ-120-80					
		300A	2MBI300VJ-120-50					
			2MBI300VJ-120-80					
		450A	2MBI450VJ-120-50					
			2MBI450VJ-120-80					
		550A					2MBI550VJ-170-50	
							2MBI550VJ-170-80	
		600A		2MBI600VJ-120-50				
				2MBI600VJ-120-80				

Note1: “-80” : Pre-Applied Thermal-Interface-Material for “-50” Note2: *1 Low Thermal Impedance Version Note3: *2 Low thermal impedance and high tracking capability type

Standard 1-Pack

mm

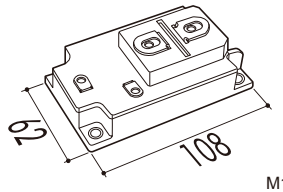

M153

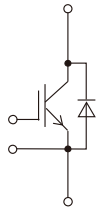

Ic	1200V		1700V
	V series		V series
	Aluminium oxide DCB	Aluminium nitride DCB	Aluminium oxide DCB
300A			1MBI300V-170-50
400A	1MBI400V-120-50	1MBI400VF-120-50	1MBI400V-170-50
600A	1MBI600V-120-50	1MBI600VF-120-50	1MBI600V-170-50
900A	1MBI900V-120-50		

Chopper

mm

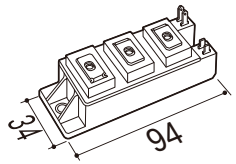

M262

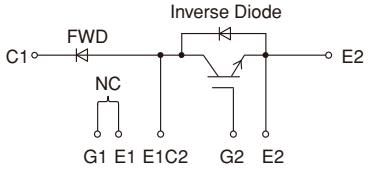

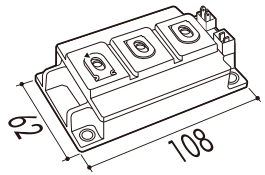

M259

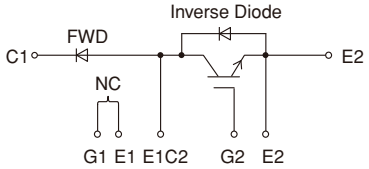

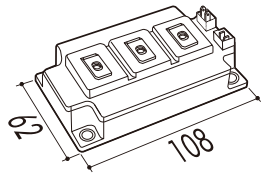

M283

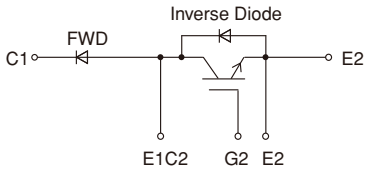

Ic	600V		1200V	
	U series	V series	U series	V series
50A			1MBI50U4F-120L-50	
75A			1MBI75U4F-120L-50	
100A			1MBI100U4F-120L-50	
150A				1MBI150VA-120L-50
200A				1MBI200VA-120L-50
200A			1MBI200U4H-120L-50	
300A	1MBI300U2H-060L-50			
400A		1MBI400VH-060L-50		

High Speed Modules

mm

			Ic	1200V High Speed IGBT
Chopper	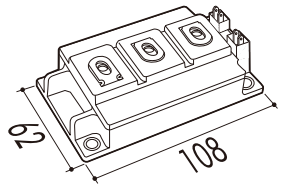 M249	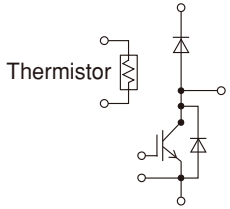	200A	1MBI200HH-120L-50
			300A	1MBI300HH-120L-50
			400A	1MBI400HH-120L-50
2-Pack	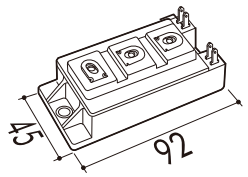 M233	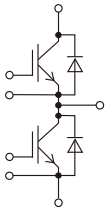	100A	2MBI100HB-120-50
	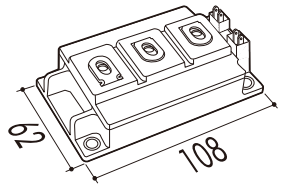 M249	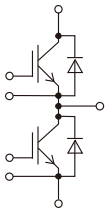	150A	2MBI150HH-120-50
			200A	2MBI200HH-120-50
	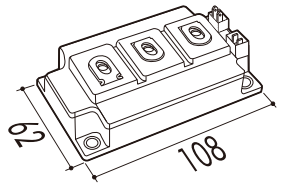 M276	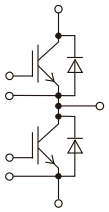	100A	2MBI100HJ-120-50
			150A	2MBI150HJ-120-50
			200A	2MBI200HJ-120-50
			300A	2MBI300HJ-120-50

High Power Modules

mm

		Ic	1200V	1700V		3300V	
			V series Trench-FS	V series Trench-FS		U series Trench-FS	
			Cu-baseplate	Cu-baseplate	AlSiC-baseplate	AlSiC-baseplate	AlSiC-baseplate Low switching loss
1-Pack	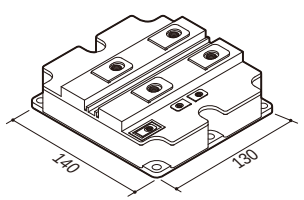 M151, M155	800A				1MBI800UG-330	
		1000A				1MBI1000UG-330	1MBI1000UG-330B
		1200A	1MBI1200VC-120P	1MBI1200VC-170E	1MBI1200VR-170E		
		1600A	1MBI1600VC-120P	1MBI1600VC-170E	1MBI1600VR-170E		
		2400A	1MBI2400VC-120P	1MBI2400VC-170E	1MBI2400VR-170E		
	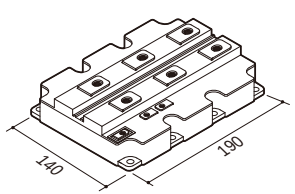 M152, M156	1200A				1MBI1200UE-330	
		1500A				1MBI1500UE-330	1MBI1500UE-330B
		2400A	1MBI2400VD-120P	1MBI2400VD-170E	1MBI2400VS-170E		
		3600A	1MBI3600VD-120P	1MBI3600VD-170E	1MBI3600VS-170E		
2-Pack	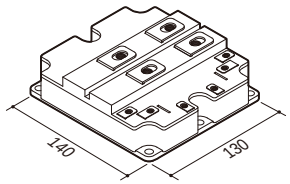 M256,M278	600A	2MBI600VG-120P	2MBI600VG-170E	2MBI600VT-170E		
		800A	2MBI800VG-120P	2MBI800VG-170E	2MBI800VT-170E		
		1200A	2MBI1200VG-120P	2MBI1200VG-170E	2MBI1200VT-170E		

Note: M151, M152, M256: Cu-baseplate M155, M156, M278: AlSiC-baseplate

PrimePACK™

Chopper

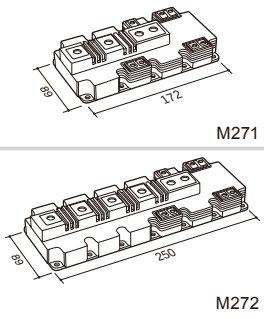

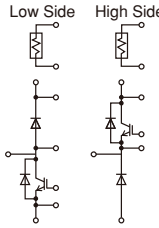

mm	Ic	1200V V series Low side configuration	1200V V series High side configuration	1700V V series Low side configuration	1700V V series High side configuration
	650A			1MBI650VXA-170EL-50	1MBI650VXA-170EH-50
				1MBI650VXA-170EL-80	1MBI650VXA-170EH-80
				1MBI650VXA-170EL-54	1MBI650VXA-170EH-54
	900A	1MBI900VXA-120PD-50 *1	1MBI900VXA-120PC-50 *1		
		1MBI900VXA-120PD-54 *1	1MBI900VXA-120PC-54 *1		
		1MBI900VXA-120PD-80 *1	1MBI900VXA-120PC-80 *1		
	1000A			1MBI1000VXB-170EL-50	1MBI1000VXB-170EH-50
				1MBI1000VXB-170EL-80	1MBI1000VXB-170EH-80
				1MBI1000VXB-170EL-54	1MBI1000VXB-170EH-54
	1400A			1MBI1400VXB-170PL-50	1MBI1400VXB-170PH-50
		1MBI1400VXB-120PL-54	1MBI1400VXB-120PH-54	1MBI1400VXB-170PL-54	1MBI1400VXB-170PH-54
		1MBI1400VXB-120PL-80	1MBI1400VXB-120PH-80	1MBI1400VXB-170PL-80	1MBI1400VXB-170PH-80

Note1: The products with suffix '-54' on this page are labeled to specify the rank of V_{sat} and V_F.
Note2: "-80" : Pre-Applied Thermal-Interface-Material for "-54"
Note3: PrimePACK™ is registered trademark of Infineon Technologies AG, Germany.
Note4: *1: Antiparallel diode current rating is 120A. Application circuit is Boost/Buck chopper only.

PrimePACK™

2-Pack

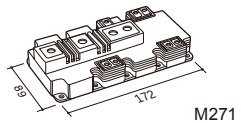

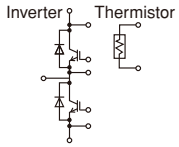

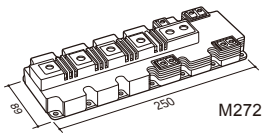

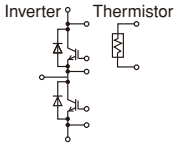

mm	Ic	1200V V series Low switching loss	1200V V series Soft turn off	1200V X series Low switching loss	1200V X series Soft turn off	1700V V series Low switching loss	1700V V series Soft turn off	1700V X series
	600A	2MBI600VXA-120E-50						
		2MBI600VXA-120E-80						
		2MBI600VXA-120E-54						
	650A					2MBI650VXA-170E-50		2MBI650XXA170-50*
						2MBI650VXA-170E-80		
						2MBI650VXA-170E-54		
						2MBI650VXA-170EA-50		
						2MBI650VXA-170EA-80		
						2MBI650VXA-170EA-54		
	900A	2MBI900VXA-120E-50	2MBI900VXA-120P-50	2MBI900XXA120E-50*	2MBI900XXA120P-50*			
		2MBI900VXA-120E-80	2MBI900VXA-120P-80					
		2MBI900VXA-120E-54	2MBI900VXA-120P-54					
	1200A			2MBI1200XXE120E-50*	2MBI1200XXE120P-50*			2MBI1200XXE170-50*
	1000A					2MBI1000VXB-170E-50		2MBI1000XXB170-50*
						2MBI1000VXB-170E-80		
						2MBI1000VXB-170E-54		
						2MBI1000VXB-170EA-50		
						2MBI1000VXB-170EA-80		
						2MBI1000VXB-170EA-54		
	1400A	2MBI1400VXB-120P-50			2MBI1400XXB120P-50*	2MBI1400VXB-170E-50	2MBI1400VXB-170P-50	2MBI1400XXB170-50*
		2MBI1400VXB-120P-80				2MBI1400VXB-170E-80	2MBI1400VXB-170P-80	
		2MBI1400VXB-120P-54				2MBI1400VXB-170E-54	2MBI1400VXB-170P-54	
	1800A				2MBI1800XXF120P-50*			2MBI1800XXF170-50*

Note1: The products with suffix '-54' on this page are labeled to specify the rank of V_{sat} and V_F.
Note2: "-80" : Pre-Applied Thermal-Interface-Material for "-54"
Note3: The products with 'EA' on this page have large FWD.
Note4: PrimePACK™ is registered trademark of Infineon Technologies AG, Germany.
*Under development

Advanced T-type NPC 3-level Modules

mm

		Ic	600V V series	600V RB-IGBT	1200V V series	1200V RB-IGBT	1700V V series	1700V RB-IGBT
3 Phase With NTC, solder pins	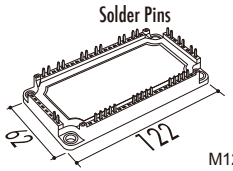 M1203 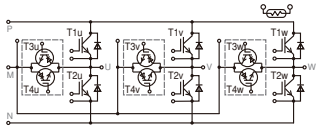	50A			12MBI50VN-120-50	600V		
		75A			12MBI75VN-120-50	600V		
		100A			12MBI100VN-120-50	600V		
3 Phase With NTC, press fit pins	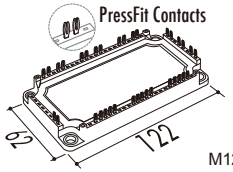 M1202 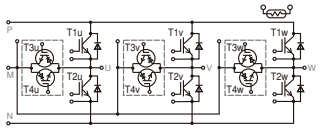	50A			12MBI50VX-120-50	600V		
		75A			12MBI75VX-120-50	600V		
		100A			12MBI100VX-120-50	600V		
1 Phase	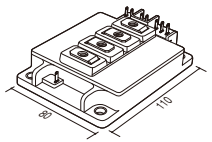 M403 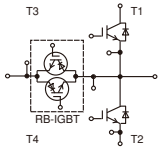	220A					4MBI220VG-170R2-50	1200V
		300A			4MBI300VG-120R-50	600V		
					4MBI300VG-120R1-50	900V		
		340A			4MBI340VF-120R-50	600V		
		400A	4MBI400VG-060R-50	600V	4MBI400VF-120R-50*1	600V		
		450A			4MBI450VF-120RD-50*2*3	600V		
1 Phase	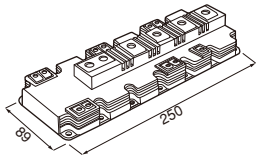 M404 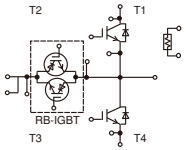	450A			4MBI450VB-120R1-50	900V	4MBI450VB-170R2-50	1200V
		600A					4MBI600VB-170R2-50	1200V
		650A			4MBI650VB-120R1-50	900V		
		900A			4MBI900VB-120R1-50	900V		

Note: AT-NPC (Advanced T-type Neutral-Point-Clamped) 3-level Module integrates RB-IGBT (Reverse Blocking-IGBT) in addition to ordinary IGBT and FWD in single package.
*1: Particular for Inverter of UPS or PCS *2: Particular for Converter of UPS *3: Under development

I-type NPC 3-level Module

mm

		Ic	600V V series	1200V V series	1700V V series
1 Phase	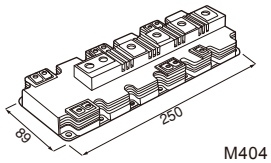 M404 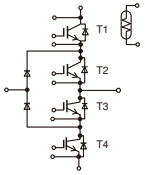	600A		4MBI600VC-120-50	

Small IPM (Intelligent Power Modules)

Built-in protection functions

- P-side fault status output (Alarm)
- N-side fault status output (Alarm)
- Under voltage protection (self shutdown)
- Over current protection (self shutdown)
- Overheating protection (self shutdown)
- Temperature sensor output (Vtemp, out)

Small IPM with High Voltage Driver-*Ic* without Brake-Chopper

mm

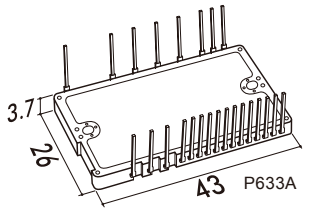

P633A

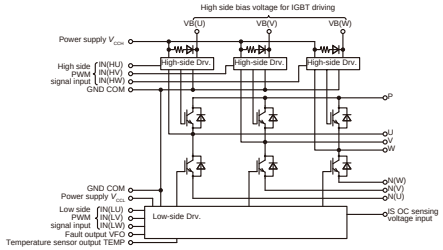

								600V
							Ic	X series
✓	—	✓	✓	✓	—		10A	6MBP10XSA060-50
							15A	6MBP15XSA060-50
							20A	6MBP20XSA060-50
							30A	6MBP30XSA060-50
✓	✓	✓	✓	✓	—		10A	6MBP10XSC060-50
							15A	6MBP15XSC060-50
							20A	6MBP20XSC060-50
							30A	6MBP30XSC060-50

IPM (Intelligent Power Modules)

Built-in protection functions

- P-side fault status output (Alarm)
- N-side fault status output (Alarm)
- Under voltage protection (self shutdown)
- Over current protection (self shutdown)
- Overheating protection (self shutdown)
- Temperature sensor output (Vtemp, out)

mm

Without Brake-Chopper

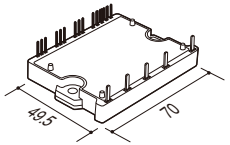

P629

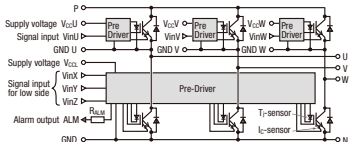

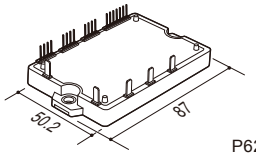

P626

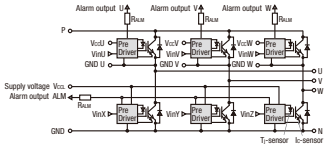

								600V	1200V
							Ic	V series	V series
—	✓	✓	✓	✓	—		10A		6MBP10VAA120-50
							15A		6MBP15VAA120-50
							20A	6MBP20VAA060-50	
							25A		6MBP25VAA120-50
							30A	6MBP30VAA060-50	
							50A	6MBP50VAA060-50	
—	✓	✓	✓	✓	✓		25A		6MBP25VBA120-50
							35A		6MBP35VBA120-50
							50A	6MBP50VBA060-50	6MBP50VBA120-50
							75A	6MBP75VBA060-50	

Without Brake-Chopper

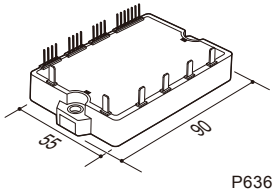

P636

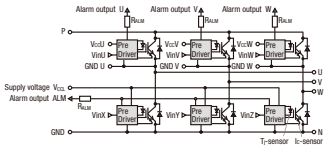

—	✓	✓	✓	✓	✓		25A		6MBP25VFN120-50
							35A		6MBP35VFN120-50
							50A	6MBP50VFN060-50	6MBP50VFN120-50
							75A	6MBP75VFN060-50	
							100A	6MBP100VFN060-50	

With Brake-Chopper

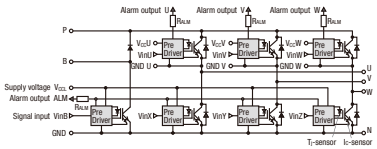

—	✓	✓	✓	✓	✓		25A		7MBP25VFN120-50
							35A		7MBP35VFN120-50
							50A	7MBP50VFN060-50	7MBP50VFN120-50
							75A	7MBP75VFN060-50	
							100A	7MBP100VFN060-50	

IPM (Intelligent Power Modules)

Built-in protection functions

P-side fault status output (Alarm)
N-side fault status output (Alarm)
Under voltage protection (self shutdown)
Over current protection (self shutdown)
Overheating protection (self shutdown)
Temperature sensor output (Vtemp, out)

mm

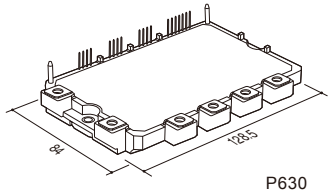

P630

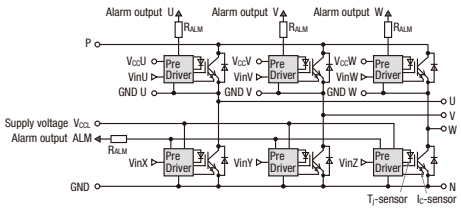

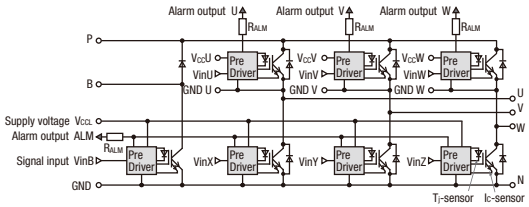

		Built-in protection functions						Ic	600V	1200V
									V series	V series
Without Brake-Chopper		–	✓	✓	✓	✓	✓	25A		6MBP25VDA120-50
								35A		6MBP35VDA120-50
								50A	6MBP50VDA060-50	6MBP50VDA120-50
										6MBP50VDN120-50
								75A	6MBP75VDA060-50	6MBP75VDA120-50
										6MBP75VDN120-50
								100A	6MBP100VDA060-50	6MBP100VDA120-50
									6MBP100VDN060-50	6MBP100VDN120-50
								150A	6MBP150VDA060-50	
									6MBP150VDN060-50	
								200A	6MBP200VDA060-50	
									6MBP200VDN060-50	
With Brake-Chopper		–	✓	✓	✓	✓	✓	25A		7MBP25VDA120-50
								35A		7MBP35VDA120-50
								50A	7MBP50VDA060-50	7MBP50VDA120-50
										7MBP50VDN120-50
								75A	7MBP75VDA060-50	7MBP75VDA120-50
										7MBP75VDN120-50
								100A	7MBP100VDA060-50	7MBP100VDA120-50
									7MBP100VDN060-50	7MBP100VDN120-50
								150A	7MBP150VDA060-50	
									7MBP150VDN060-50	
								200A	7MBP200VDA060-50	
									7MBP200VDN060-50	

Note1: The products with 'VDN' on this page have high heat dissipation characteristics.

IPM (Intelligent Power Modules)

Built-in protection functions

P-side fault status output (Alarm)
N-side fault status output (Alarm)
Under voltage protection (self shutdown)
Over current protection (self shutdown)
Overheating protection (self shutdown)
Temperature sensor output (Vtemp, out)

mm

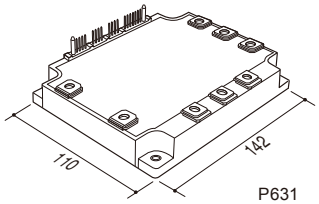

P631

Without Brake-Chopper

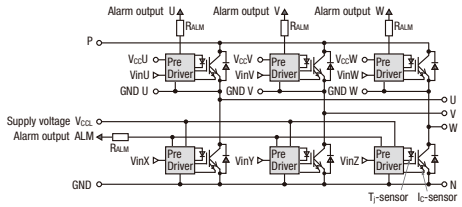

With Brake-Chopper

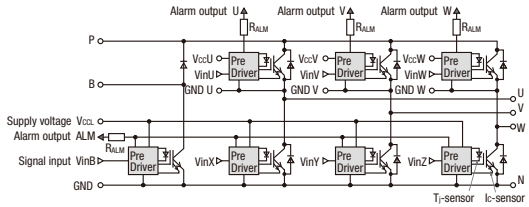

								Ic	600V V series	1200V V series
Without Brake-Chopper								100A		6MBP100VEA120-50
								150A		6MBP150VEA120-50
	–	✓	✓	✓	✓	✓		200A	6MBP200VEA060-50	6MBP200VEA120-50
								300A	6MBP300VEA060-50	
								400A	6MBP400VEA060-50	
With Brake-Chopper								100A		7MBP100VEA120-50
								150A		7MBP150VEA120-50
	–	✓	✓	✓	✓	✓		200A	7MBP200VEA060-50	7MBP200VEA120-50
								300A	7MBP300VEA060-50	
								400A	7MBP400VEA060-50	

Hybrid SiC Modules

mm

			Ic	600V V series	1200V V series	1700V V series
2-Pack	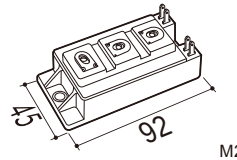 M274	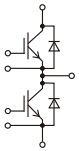	200A		2MSI200VAB-120-53	
2-Pack	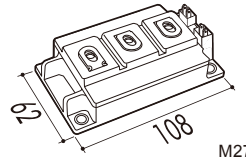 M276	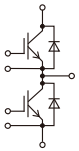	300A		2MSI300VAH-120C-53	
2-Pack	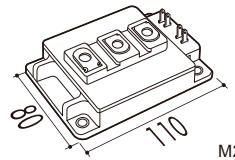 M277	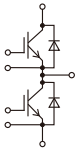	400A			2MSI400VAE-170-53
2-Pack	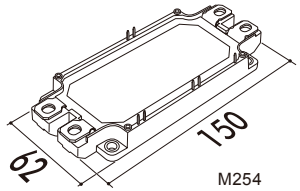 M254	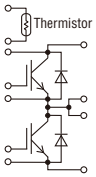	300A		2MSI300VAN-120-53	
			450A		2MSI450VAN-120-53	
			550A			2MSI550VAN-170-53
			600A		2MSI600VAN-120-53	
2-Pack	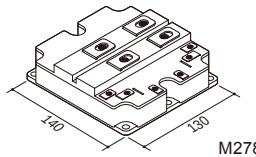 M278	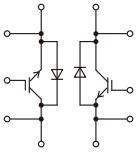	1200A			2MSI1200VAT-170PC *1
						2MSI1200VAT-170EC *2
PIM	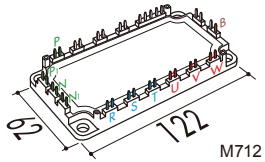 M712	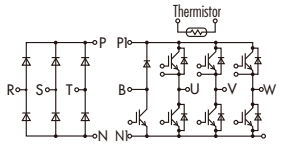	35A		7MSR35VAB120-50	
			50A	7MSR50VAB060-50	7MSR50VAB120-50	
			75A	7MSR75VAB060-50		
			100A	7MSR100VAB060-50		
6-Pack	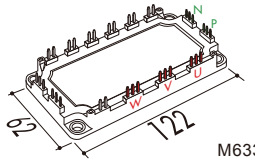 M633	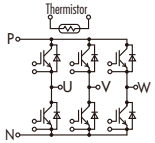	100A		6MSI100VAB-120-50	

*1: Low $V_{CE(sat)}$ type *2: Low switching losses

Discrete IGBT

	Ic	600V			650V	1200V		
		V series	High speed V series	RB series	High speed W series	V series	High speed V series	High speed W series
TO-247-P2	15A						FGW15N120H	
	25A							FGW25N120W
	30A						FGW30N120H	
	35A		FGW35N60H					
	40A				FGW40N65W		FGW40N120H	FGW40N120W
	50A		FGW50N60H		FGW50N65W			
	60A				FGW60N65W			
	75A		FGW75N60H		FGW75N65W			
	15A					FGW15N120VD	FGW15N120HD	
	25A					FGW25N120VD		FGW25N120WD/WE
	30A	FGW30N60VD					FGW30N120HD	
	35A		FGW35N60HD/HC					
	40A				FGW40N65WD/WE	FGW40N120VD	FGW40N120HD	FGW40N120WD/WE
	50A	FGW50N60VD	FGW50N60HD/HC		FGW50N65WD/WE			
	60A				FGW60N65WD/WE			
	75A		FGW75N60HD/HC		FGW75N65WE			
	85A			FGW85N60RB				
TO-247-4-P2	40A							FGZ40N120WE
	50A				FGZ50N65WD/WE			
	75A				FGZ75N65WE			

Recommended operating frequency

~10kHz	~20kHz	~100kHz		
V/RB				
High speed V				
		High speed W		

Rectifier Diode

	Ic	Ultra Fast Recovery Diodes 600V		Ultra Fast Recovery Diodes 650V	Soft Recovery Fast Recovery Diodes 1200V	
TO-220	15A	FDRP15S60L				
	25A	FDRP25S60L				
	35A					
	75A					
TO-247-P2	12A				FDRW12S120J	
	15A	FDRW15S60L				
	20A				FDRW20S120J	
	25A	FDRW25S60L				
	30A				FDRW30S120J	
	35A	FDRW35S60L				
	40A					FDRW40C120J
	50A		FDRW50C60L			
	60A					FDRW60C120J
	70A		FDRW70C60L			
TO-247-2-P2	60A	FDRW60T60L				
	75A			FDRW75T65L		

SiC-SBD

	Ic	600V		1200V	
T-Pack(s)	10A	FDCC10S65			
	20A		FDCC20C65		
	25A	FDCC25S65			
TO-220-2	10A	FDCP10S65			
	25A	FDCP25S65			
TO-220	20A		FDCP20C65		
TO-220F	20A		FDCA20C65		
TO-220F-2	10A	FDCA10S65			
	18A			FDCA18S120	
	25A	FDCA25S65			
TO-247	10A	FDCY10S65			
	18A			FDCY18S120	
	20A		FDCY20C65		
	25A	FDCY25S65			
	36A				FDCY36C120
	50A		FDCY50C65		
TO-247-2-P2	18A			FDCW18T120	

Package Outlines, mm

M151

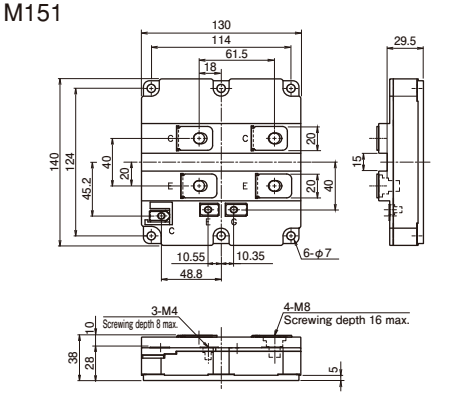

M152

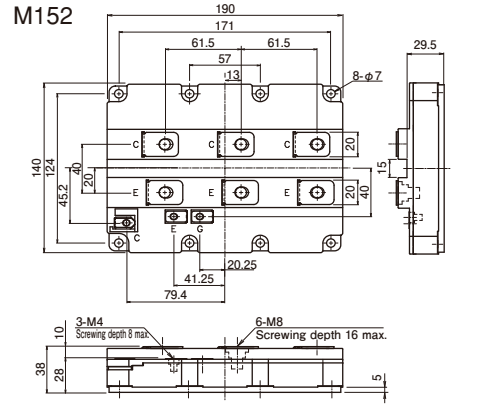

M153

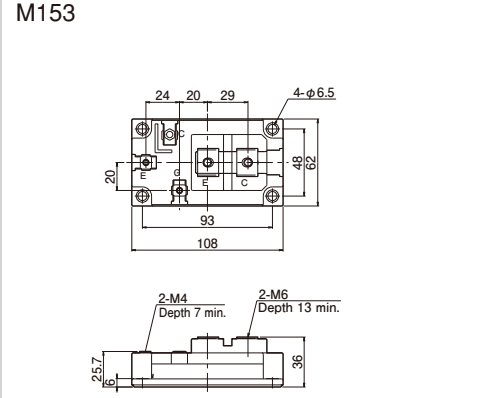

M155

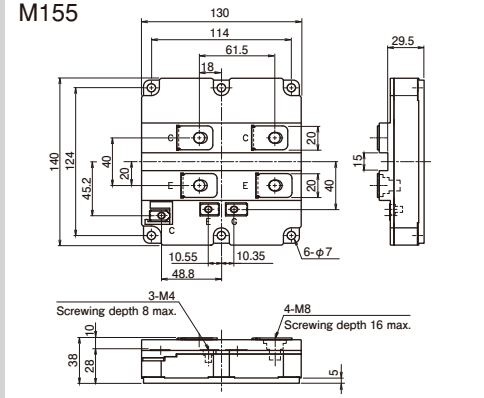

M156

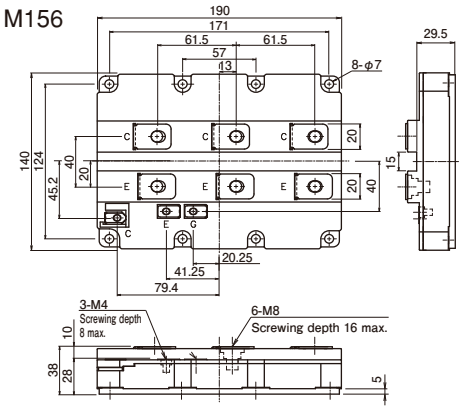

M233

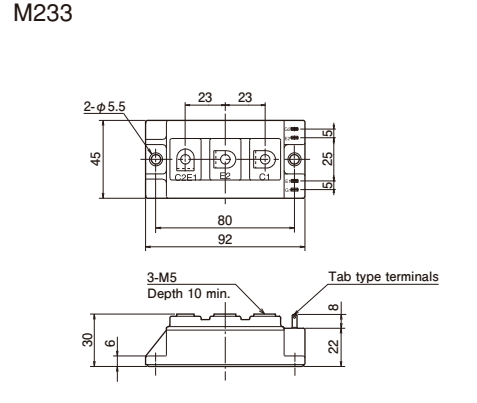

M249

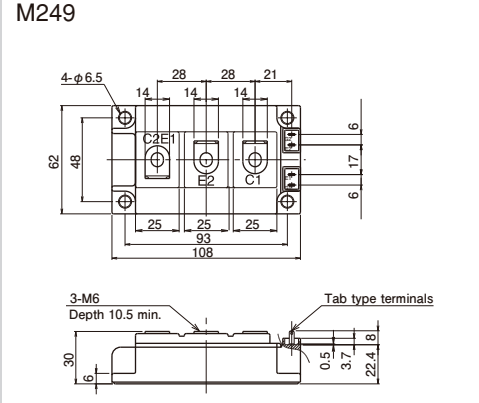

M250

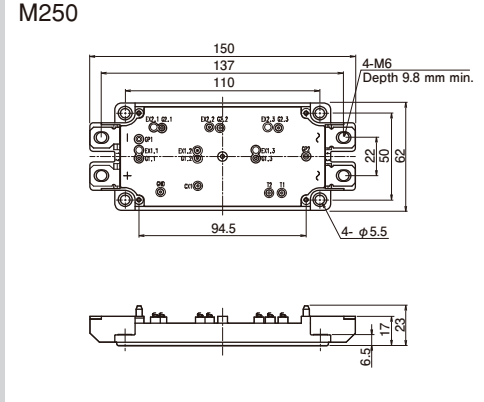

M254

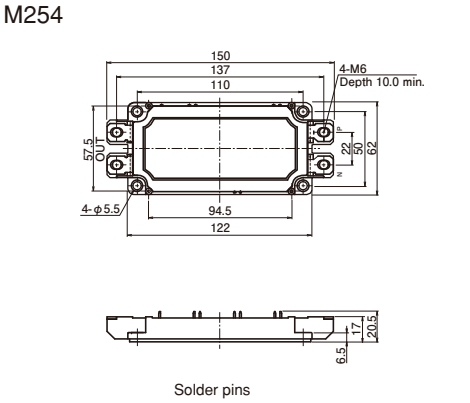

M256

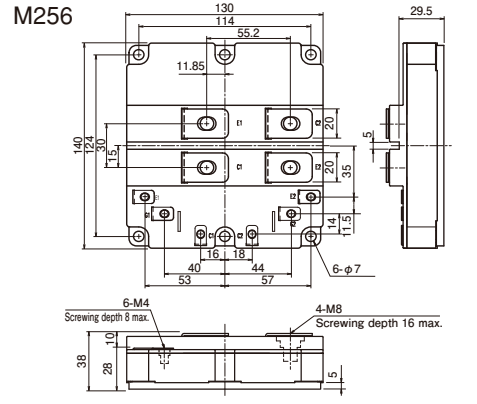

M259

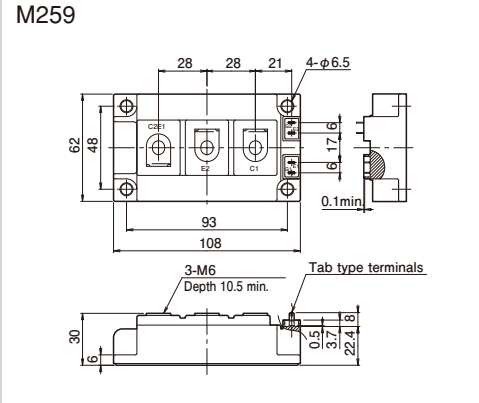

M260

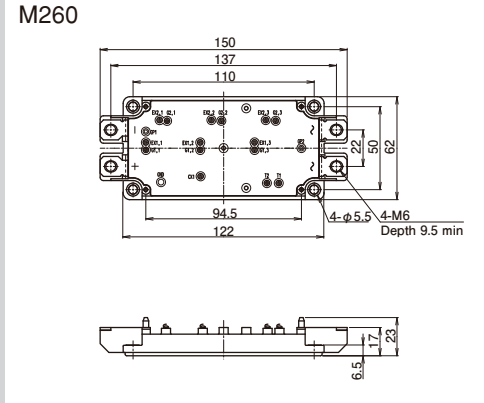

Package Outlines, mm

M262

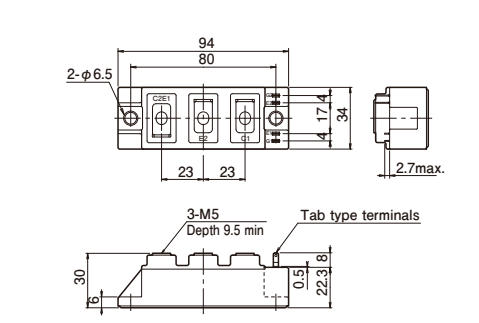

M263

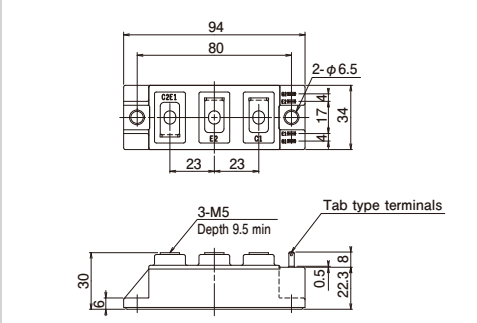

M271

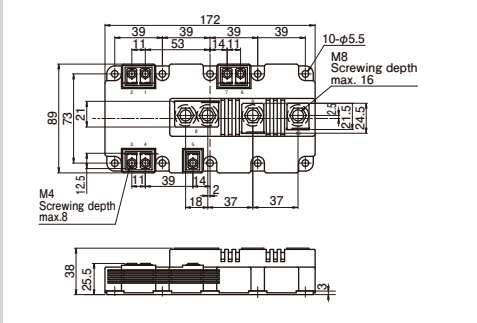

M272

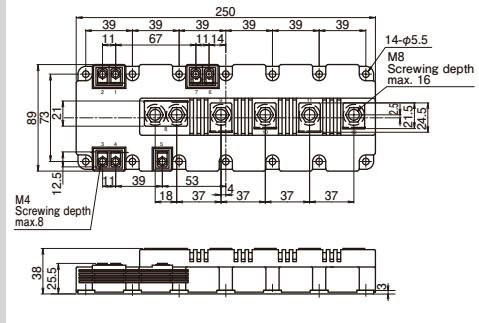

M274

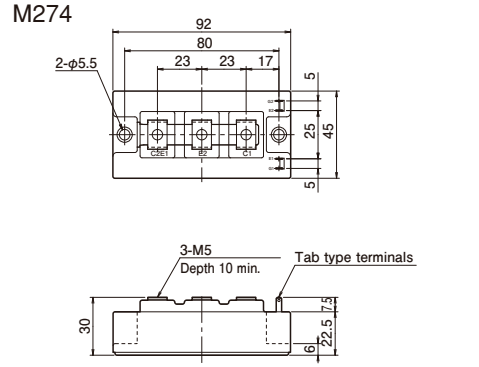

M275

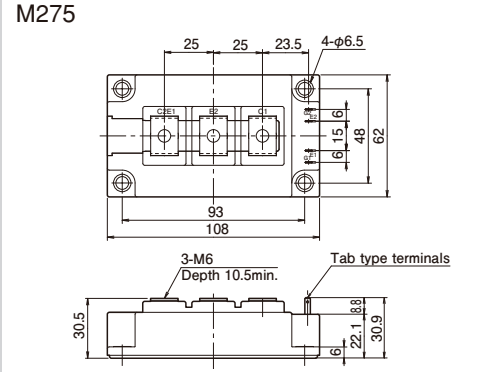

M276

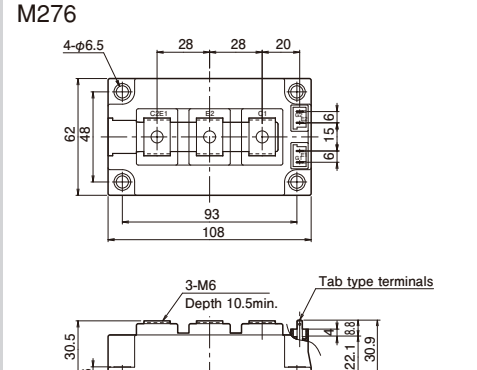

M277

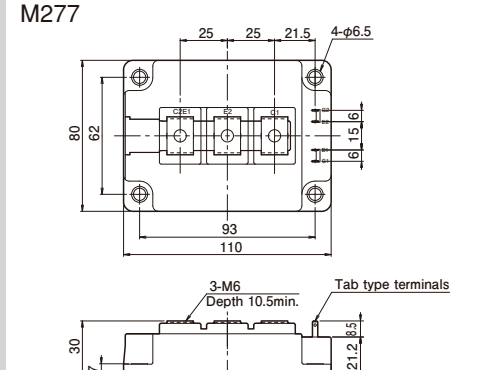

M278

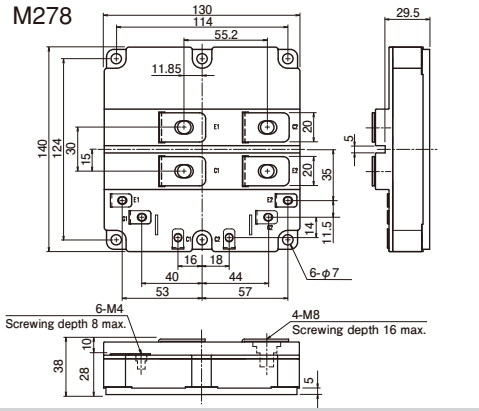

M282

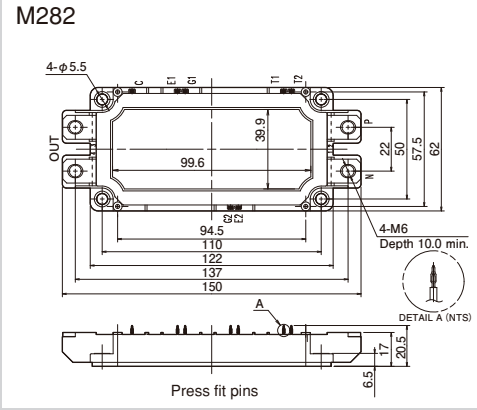

M283

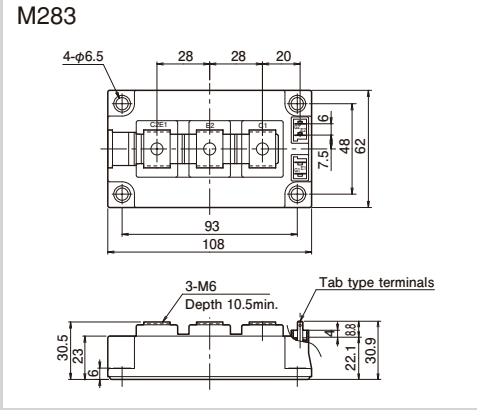

M285

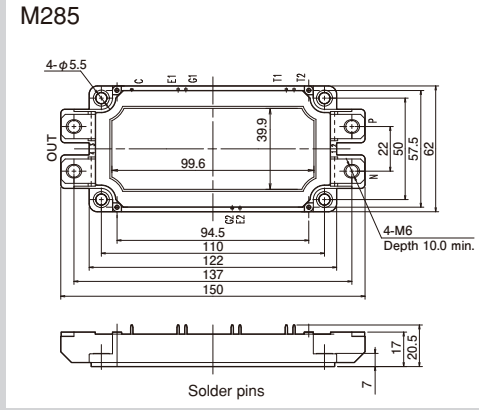

Package Outlines, mm

M286

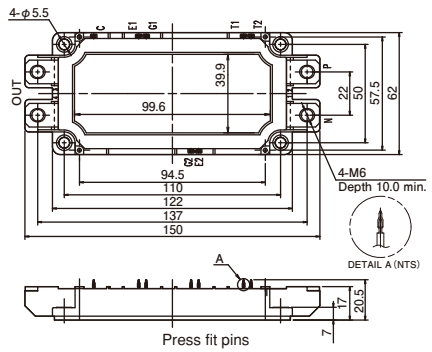

Press fit pins

M404

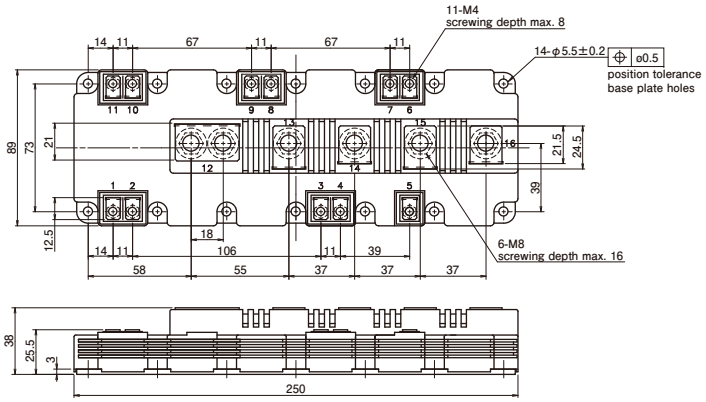

M629

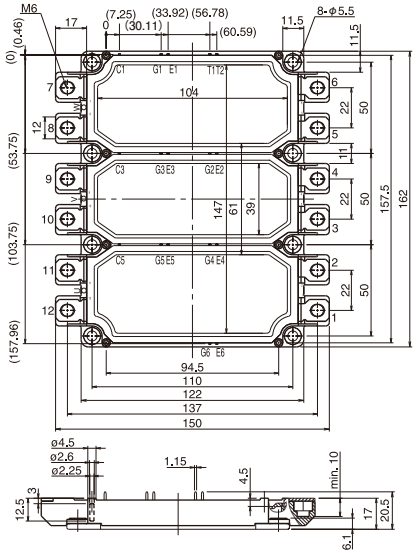

( ) : Theoretical dimensions, tolerance ø0.5

M403

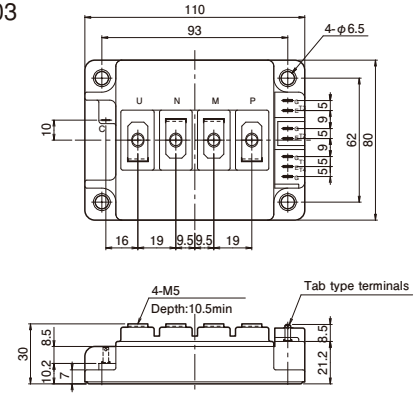

M633

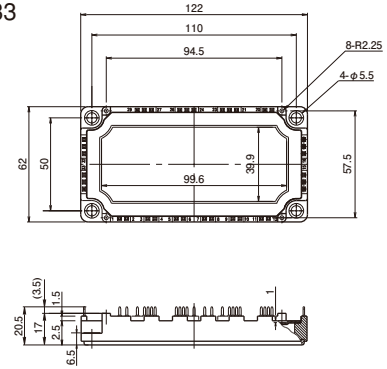

Solder pins

M636

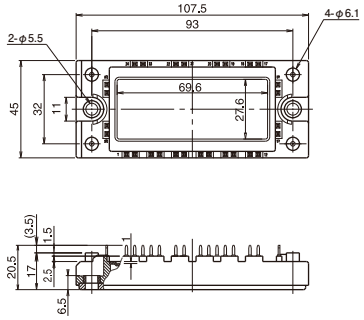

Solder pins

M647

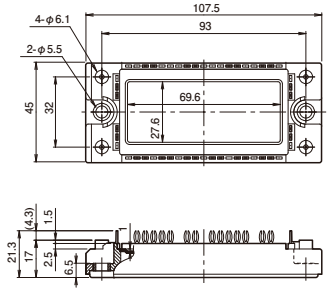

Press fit pins

M648

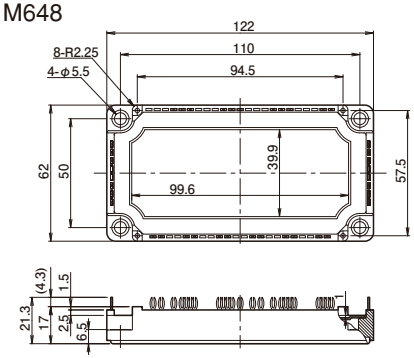

Press fit pins

M668

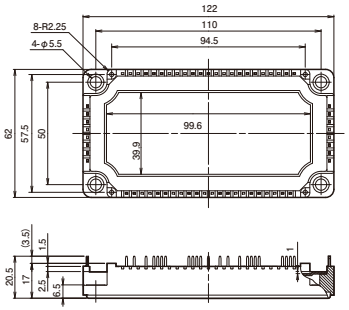

Solder pins

M669

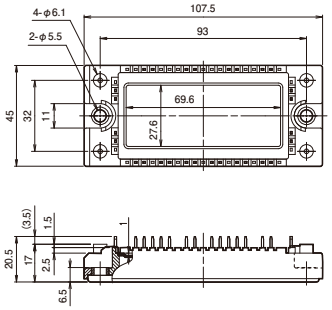

Solder pins

Package Outlines, mm

M711

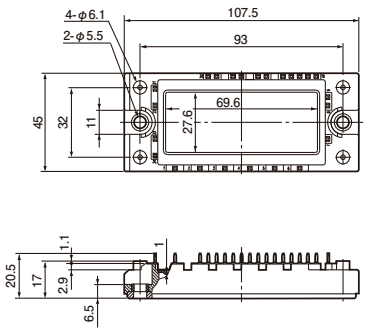

Solder pins

M712

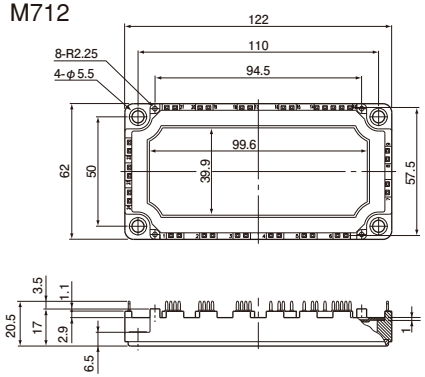

Solder pins

M719

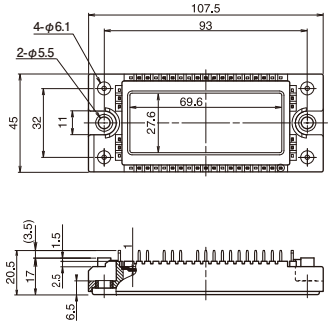

Solder pins

M720

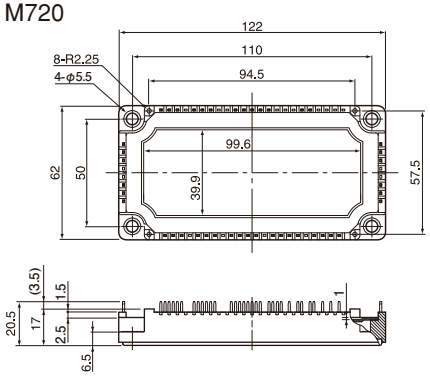

Solder pins

M721

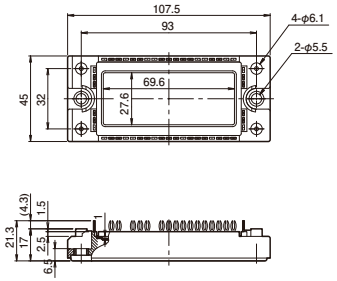

Press fit pins

M722

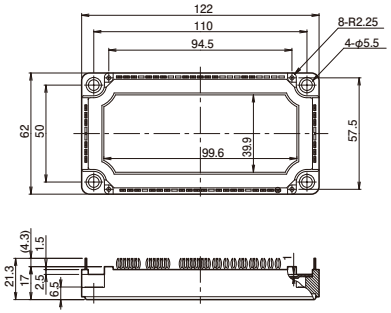

Press fit pins

M726

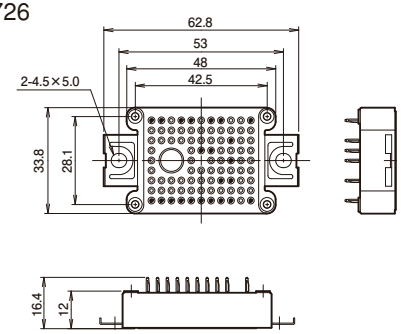

Press fit pins

M727

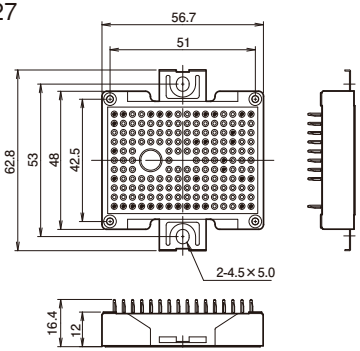

Press fit pins

M728

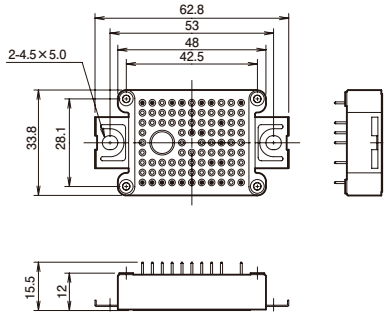

Solder pins

M729

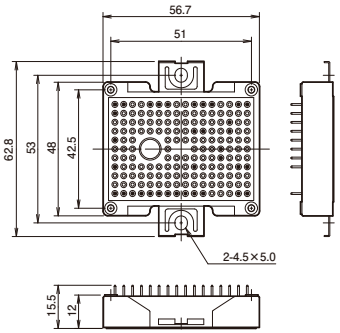

Solder pins

M730

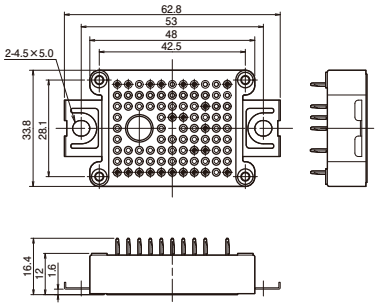

Press fit pins

M731

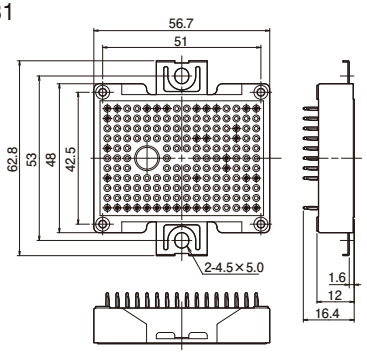

Press fit pins

Package Outlines, mm

M732

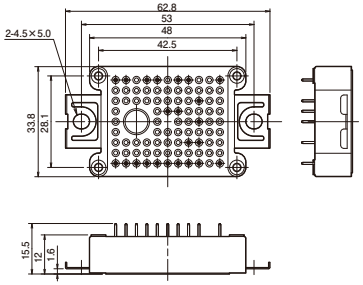

Solder pins

M733

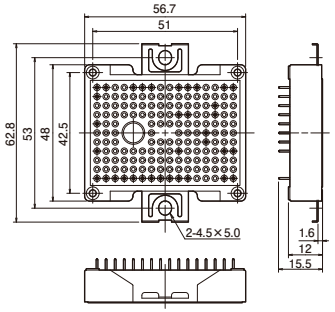

Solder pins

M1202

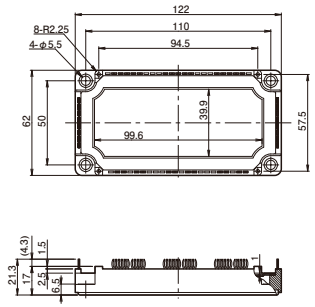

Press fit pins

M1203

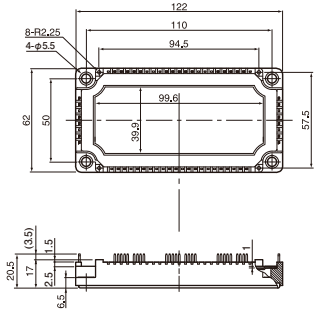

Solder pins

P626

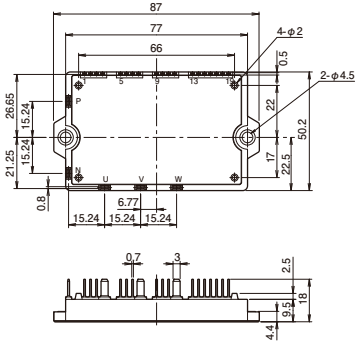

P629

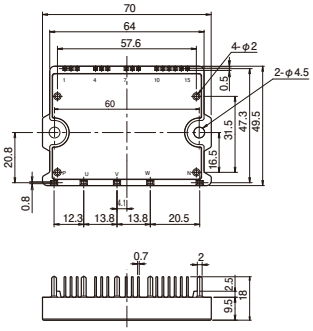

P630

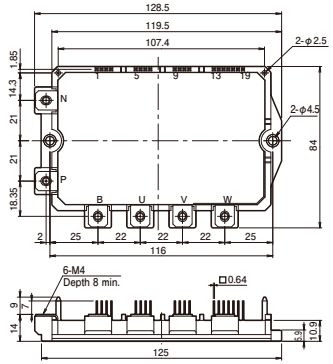

P631

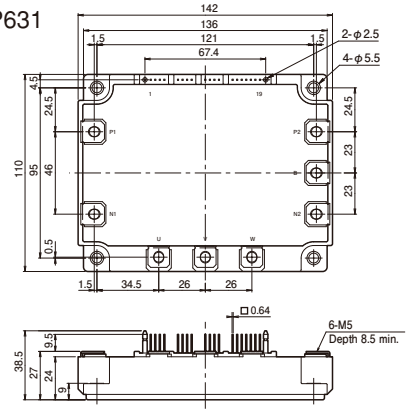

P633A

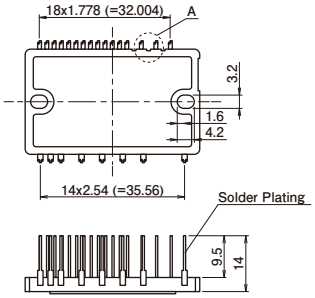

P636

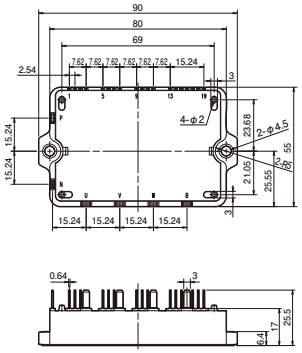

TO-247-P2

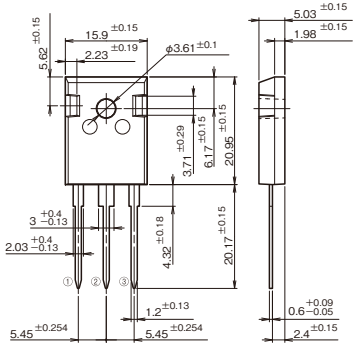

TO-247-2-P2

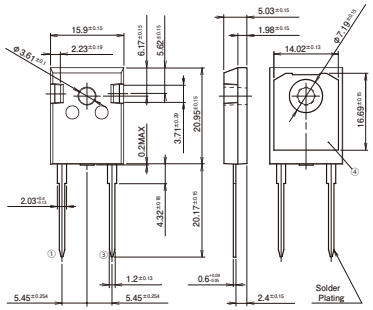

Package Outlines, mm

TO-247-4-P2

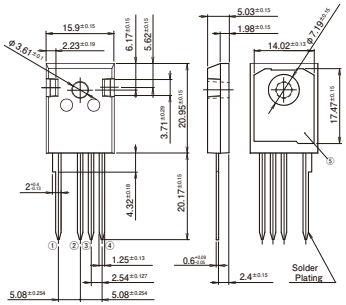

TO-247

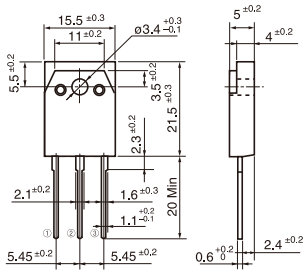

TO-220

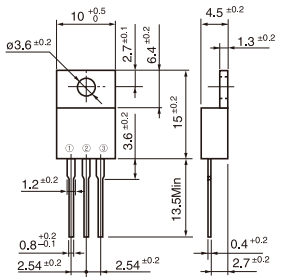

TO-220-2

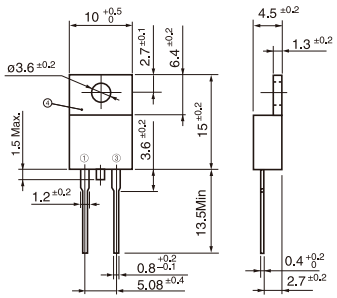

TO-220F

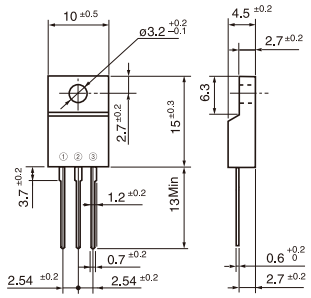

TO-220F-2

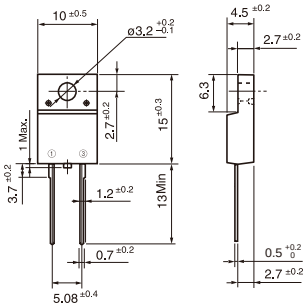

T-Pack(s)

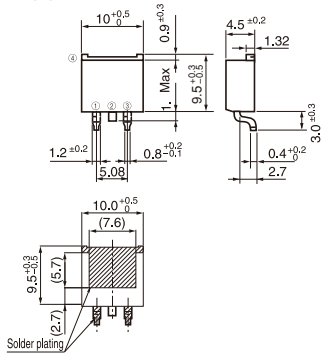

Package Outlines, mm

ご注意

1. このカタログの内容（製品の仕様、特性、データ、材料、構造など）は 2017 年 12 月現在のものです。
この内容は製品の仕様変更のため、または他の理由により事前の予告なく変更されることがあります。このカタログに記載されている製品を使用される場合には、その製品の最新版の仕様書を入手して、データを確認してください。

2. 本カタログに記載してある応用例は、富士電機の半導体製品を使用した代表的な応用例を説明するものであり、本カタログによって工業所有権、その他権利の実施に対する保証または実施権の許諾を行うものではありません。

3. 富士電機（株）は絶えず製品の品質と信頼性の向上に努めています。しかし、半導体製品はある確率で故障する可能性があります。富士電機の半導体製品の故障が、結果として人身事故，火災等による財産に対する損害や、社会的な損害を起こさぬように冗長設計、延焼防止設計、誤動作防止設計など安全確保のための手段を講じてください。

4. 本カタログに記載している製品は、普通の信頼度が要求される下記のような電子機器や電気機器に使用されることを意図して造られています。
・コンピュータ　・OA 機器　・通信機器（端末）　・計測機器　・工作機械
・オーディオビジュアル機器　・家庭用電気製品　・パーソナル機器　・産業用ロボット　など

5. 本カタログに記載の製品を、下記のような特に高い信頼度を持つ必要がある機器に使用をご予定のお客様は、事前に富士電機（株）へ必ず連絡の上、了解を得てください。このカタログの製品をこれらの機器に使用するには、そこに組み込まれた富士電機の半導体製品が故障しても、機器が誤動作しないように、バックアップ・システムなど、安全維持のための適切な手段を講じることが必要です。
・輸送機器（車載、舶用など）　・幹線用通信機器　・交通信号機器
・ガス漏れ検知及び遮断機　・防災／防犯装置　・安全確保のための各種装置　・医療機器

6. 極めて高い信頼性を要求される下記のような機器及び戦略物資に該当する機器には、本カタログに記載の製品を使用しないでください。
・宇宙機器　・航空機搭載用機器　・原子力制御機器　・海底中継機器

7. 本カタログの一部または全部の転載複製については、文書による当社の承諾が必要です。

8. このカタログの内容にご不明の点がありましたら、製品を使用する前に富士電機（株）または、その販売店へ質問してください。
本注意書きの指示に従わないために生じたいかなる損害も富士電機（株）とその販売店は責任を負うものではありません。

⚠ 安全に関するご注意

＊ご使用の前に，「取扱説明書」や「仕様書」などをよくお読みいただくか，当社またはお買上の販売店にご相談のうえ，正しくご使用ください。
＊取扱いは当該分野の専門の技術を有する人が行ってください。
輸出に関してのお願い：本品のうちで，戦略物資(または役務)に該当するものを輸出される場合は，外国為替および外国貿易管理法に基づく輸出許可が必要です。

富士電機株式会社

URL http: //www.fujielectric.co.jp/products/semiconductor/

本社　☎(03)5435-7156
〒141-0032　東京都品川区大崎1-11-2(ゲートシティ大崎イーストタワー)

中部支社　☎(052)746-1023
〒460-0007　愛知県名古屋市中区新栄1-5-8(広小路アクアプレイス)

関西支社　☎(06)7166-7314
〒530-0011　大阪府大阪市北区大深町3-1(グランフロント大阪 タワー B 32F)

富士電機(香港)社
Fuji Electric Hong Kong Co., Ltd.
Suites 1911-13, 19/F., Tower 6, The Gateway, Harbour City,
Tsim Sha Tsui, Kowloon, Hong Kong
Tel: +852-2664-8699

台湾富士電機社
Fuji Electric Taiwan Co., Ltd.
10F. No.168, Song Jiang Road, Taipei, Taiwan
Tel: +886-2-2515-1850

富士電機アジアパシフィック社
Fuji Electric Asia Pacific Pte. Ltd.
151 Lorong Chuan, #03-01/01A New Tech Park, SINGAPORE 556741
Tel: +65-6533-0014

富士電機(中国)社
Fuji Electric (China) Co., Ltd.
26F, Global Harbor Tower B,
1188 North KaiXuan Road, PuTuo District,
Shanghai 200062, P.R.China
Tel: +86-21-5496-1177

富士電機アメリカ社
Fuji Electric Corp. of America
50 Northfield Avenue
Edison, NJ 08837, USA
Tel: +1-732-560-9410

富士電機ヨーロッパ社
Fuji Electric Europe GmbH
Goethering 58, 63067 Offenbach, am Main, F.R. GERMANY
Tel: +49-69-6690290

● 特約店

VEGETABLE OIL INK

本資料の内容は製品改良などのために変更することがありますのでご了承ください。

2017-12 L30 FOLS　Printed in Japan